ETA-Danmark A/S
Göteborg Plads 1
DK-2150 Nordhavn
Tel. +45 72 24 59 00
Fax +45 72 24 59 04
Internet www.etadanmark.dk

Authorised and notified according to Article 29 of the Regulation (EU) No 305/2011 of the European Parliament and of the Council of 9 March 2011

MEMBER OF EOTA

European Technical Assessment ETA-13/1063 of 09/08/2016

I General Part

Technical Assessment Body issuing the ETA and designated according to Article 29 of the Regulation (EU) No 305/2011: ETA-Danmark A/S

Trade name of the construction product:	Gutzeit Post bases
Product family to which the above construction product belongs:	Three-dimensional nailing plate (Post bases for the support of timber columns and posts as load-bearing elements)
Manufacturer:	Gutzeit Verbindungssysteme GmbH & Co. Rudolf-Diesel-Strasse 1 D-58730 Fröndenberg, Industriegebiet Tel. +49 2373 - 979261 Fax +49 2373 - 979266 Internet www.gutzeit-holzverbinder.de
Manufacturing plant:	Gutzeit Verbindungssysteme GmbH & Co. Rudolf-Diesel-Strasse 1 D-58730 Fröndenberg, Industriegebiet
This European Technical Assessment contains:	42 pages including 2 annexes which form an integral part of the document
This European Technical Assessment is issued in accordance with Regulation (EU) No 305/2011, on the basis of:	Guideline for European Technical Approval (ETAG) No. 015 Three Dimensional Nailing Plates, April 2013, used as European Assessment Document (EAD).
This version replaces:	The ETA with the same number and issued on 2014-01-16

Translations of this European Technical Assessment in other languages shall fully correspond to the original issued document and should be identified as such.

Communication of this European Technical Assessment, including transmission by electronic means, shall be in full (excepted the confidential Annex(es) referred to above). However, partial reproduction may be made, with the written consent of the issuing Technical Assessment Body. Any partial reproduction has to be identified as such.

II SPECIFIC PART OF THE EUROPEAN TECHNICAL ASSESSMENT

1 Technical description of product and intended use

Technical description of the product
The post bases are made from 4.0 mm to 8.0 mm thick steel plates in combination with reinforcing bars, threaded rods or steel tubes. The post bases are produced from steel grade S235JR according to EN 10025-2:2005 with minimum characteristic yield strength of R_e = 235 N/mm² and minimum characteristic tensile strength of R_m = 360 N/mm². The reinforcing bars are produced from steel grade B500A according to EN 10080:2005 with minimum characteristic yield strength of R_{eH} = 500 N/mm².

For the connections with metal fasteners nails ø4,0x40 according to EN 14592, dowels and bolts ø10, ø12 mm (S235) and coach screws ø8,0, ø10,0 and ø12,0 mm according to EN 14592 (DIN 571 and thread according to DIN 7998) are used.

Dimensions are shown in Annex A and B.

2 Specification of the intended use in accordance with the applicable EAD

The intended use of the post bases is the support of timber columns and posts as load-bearing elements, where requirements for mechanical resistance and stability and safety in use in the sense of the Basic Works Requirements 1 and 4 of Regulation (EU) 305/2011 shall be fulfilled.

The static and kinematical behaviour of the timber members or the supports shall be as described in Annex B.

The timber posts may be of solid timber of strength class C24 or better according to EN 338:2009. Minimum dimensions for the post have to be considered (Annex A).

The post base shall be installed as pictured in the drawings. The cross-section of the timber column shall be positioned centrically and with the end grain plane on the base plate. Post bases type H may have a clearance between the end grain of the timber post and the base plate of the post base due to constructive wood preservation (maximum 10 mm).

The maximum distance between the foundation and the base plate of the post base is given in Annex A, table A.1.

Annex B states the load-carrying capacities of the post bases for solid timber of strength class C24 according to EN 338:2009. The design of the connections shall be in accordance with Eurocode 3 and Eurocode 5 or a similar national code. The anchorage of the post base in the foundation and imperfections exceeding the assumptions in Eurocode 5, 5.4.4 are not part of this ETA.

The post bases are for use in timber structures subject to the service classes 1, 2 and 3 of Eurocode 5 and for connections subject to static or quasi-static loading. The corrosion protection is given by hot-dip zinc coating with a minimum thickness of 55 µm according to EN 1461 or zinc coating Fe/Zn 25c according to EN ISO 2081. The metal fasteners must also have a zinc coating for the intended use in service class 3 of EN 1995-1-1 (zinc coating Fe/Zn 25c according to EN ISO 2081).

The scope of the post bases regarding resistance to corrosion shall be defined according to national provisions that apply at the installation site considering environmental conditions.

The provisions made in this European Technical Assessment are based on an assumed intended working life of the post bases of 50 years.
The indications given on the working life cannot be interpreted as a guarantee given by the producer or Assessment Body, but are to be regarded only as a means for choosing the right products in relation to the expected economically reasonable working life of the works.

3 Performance of the product and references to the methods used for its assessment

Characteristic	Assessment of characteristic
3.1 Mechanical resistance and stability*) (BR1)	
Characteristic load-carrying capacity	See Annex B
Stiffness	No performance determined
Ductility in cyclic testing	No performance determined
3.2 Safety in case of fire (BR2)	
Reaction to fire	The hold downs are made from steel classified as **Euroclass A1** in accordance with EN 1350-1 and EC decision 96/603/EC, amended by EC Decision 2000/605/EC
3.3 Hygiene, health and the environment (BR3)	
Influence on air quality	No dangerous materials
3.7 Sustainable use of natural resources (BR7)	No Performance Dtermined
3.8 General aspects related to the performance of the product	The post bases have been assessed as having satisfactory durability and serviceability when used in timber structures using the timber species described in Eurocode 5 and subject to the conditions defined by service class 1 and 2
Identification	See Annex A

*) See additional information in section 3.8 – 3.9.

In addition to the specific clauses relating to dangerous substances contained in this European technical Assessment, there may be other requirements applicable to the products falling within its scope (e.g. transposed European legislation and national laws, regulations and administrative provisions). In order to meet the provisions of the Construction Products Regulation, these requirements need also to be complied with, when and where they apply.

3.9 Methods of verification

Safety principles and partial factors

The characteristic load-carrying capacities are based on the characteristic values of the connections with metal fasteners, the steel plates and the timber post.

In the case of timber failure or failure of the metal fasteners, the design values shall be calculated according to EN 1995-1-1 by dividing the characteristic values of the load-carrying capacities by different partial factors for the strength properties, and in addition multiplied with the coefficient k_{mod}.

In the case of steel failure, the design value shall be calculated according to EN 1993-1-1 by reducing the characteristic values of the load-carrying capacity with different partial factors.

The design value of the load-carrying capacity is the smaller value of all load-carrying capacities:

$$F_{Rd} = \min\left\{\frac{k_{mod} \cdot F_{Rk,T}}{\gamma_{M,T}}; \frac{F_{Rk,S}}{\gamma_{Mi,S}}\right\}$$

Therefore, for timber failure or failure of the metal fasteners the load duration class and the service class are included. The different partial factors γ_M for steel or timber failure, respectively, are also correctly taken into account.

3.10 Mechanical resistance and stability

See Annex B for the characteristic load-carrying capacity in the different directions F_1 to F_5 for solid timber of strength class C24 according to EN 338:2009. Using the load-carrying capacities of the post bases, the specifications in Annex A must be fulfilled. The end grain of the timber post must in general be plane on the base plate of the post base. Post bases type H may have a clearance between the end grain of the timber post and the base plate of the post base due to constructive wood preservation (maximum 10 mm).

The characteristic capacities of the post bases are determined by calculation according to Eurocode 3 and Eurocode 5. They should be used for designs in accordance with Eurocode 3 and Eurocode 5 or a similar national code.

No performance has been determined in relation to ductility of a joint under cyclic testing. The contribution to the performance of structures in seismic zones, therefore, has not been assessed.

No performance has been determined in relation to the joint's stiffness properties - to be used for the analysis of the serviceability limit state.

No performance has been determined in relation to the anchorage of the post bases in the foundation. It must be checked by the designer of the structure to ensure it is not less than the post base capacity and, if necessary, the post base capacity reduced accordingly. Therefore the specifications for the lever arms $e_{F2/F3}$ (for load case F_2 / F_3) and $e_{F4/F5}$ (for load case F_4 / F_5) in annex A have to be considered. The lever arm is the distance between the top edge of the foundation and the load.

3.11 Aspects related to the performance of the product

3.11.1 Corrosion protection in service class 1, 2 and 3.
The post bases are produced from steel grade S235JR according to EN 10025-2:2005 with minimum characteristic yield strength of R_e = 235 N/mm² and minimum characteristic tensile strength of R_m = 360 N/mm². The reinforcing bars are produced from steel grade B500A according to EN 10080:2005 with minimum characteristic yield strength of R_{eH} = 500 N/mm²

The corrosion protection is given by hot-dip zinc coating with a minimum thickness of 55 µm according to EN 1461 or zinc coating Fe/Zn 25c according to EN ISO 2081. The metal fasteners must also have a zinc coating for the intended use in service class 3 of EN 1995-1-1 (zinc coating Fe/Zn 25c according to EN ISO 2081).

3.12 General aspects related to the fitness for use of the product

The hold downs are manufactured in accordance with the provisions of this European Technical Assessment using the manufacturing processes as identified in the inspection of the plant by the notified inspection body and laid down in the technical documentation

The nailing pattern used shall be either the maximum or the minimum pattern as defined in Annex A.

The following provisions apply:

The timber post

- shall be restrained against rotation, and supported at the lower and upper end
- shall be strength class C24 according to EN 338:2009 or better, see section 3 of this evaluation report
- shall be free from wane in the post base
- must fulfil the requirements regarding minimum dimensions (see Annex A)
- end grain must in general be plane on the base plate of the post base; post bases type H may

have a distance between the end grain of the timber post and the base plate of the post base due to constructive wood preservation (maximum 10 mm)

The post base shall be installed centrically in the cross-section of the timber column.

The actual end bearing capacity of the timber member to be used in conjunction with the post base is checked by the designer of the structure to ensure it is not less than the post base capacity and, if necessary, the post base capacity reduced accordingly.

There are no specific requirements relating to preparation of the timber members.

The anchorage of the post base in the foundation is not part of this ETA. It must be checked by the designer of the structure to ensure it is not less than the post base capacity and, if necessary, the post base capacity reduced accordingly. Therefore the specifications for the lever arms eF2/F3 (for load case F2 / F3) and eF4/F5 (for load case F4 / F5) in Annex A have to be considered. The lever arm is the distance between the top edge of the foundation and the load.

4 Attestation and verification of constancy of performance (AVCP)

4.1 AVCP system

According to the decision 97/638/EC of the European Commission1, as amended, the system(s) of assessment and verification of constancy of performance (see Annex V to Regulation (EU) No 305/2011) is 2+.

5 Technical details necessary for the implementation of the AVCP system, as foreseen in the applicable EAD

Technical details necessary for the implementation of the AVCP system are laid down in the control plan deposited at ETA-Danmark

Issued in Copenhagen on 2016-08-09 by

Thomas Bruun
Managing Director, ETA-Danmark

Annex A
Product details and definitions

Table A.1 Specifications of the post bases

Post base		Metal Fasteners			Post [mm]		Distances [mm]		
Type	Article No.	Screw (Nail)	Bolt	Dowel	min. b	min. h	max.a	$e_{F2/F3}$	$e_{F4/F5}$
Type H	89900	-	2 x Ø 10,0	-	71	100	50	195	50
	89901	-	2 x Ø 10,0	-	81	100	50	195	50
	89902	-	2 x Ø 10,0	-	91	100	50	195	50
	89903	-	2 x Ø 10,0	-	101	100	50	195	50
	89904	-	2 x Ø 10,0	-	121	100	50	195	50
	89905	-	2 x Ø 10,0	-	141	100	50	195	50
Type U	891051	8 Nails Ø 4,0	1 x Ø 12,0	-	80	110	185	-	-
	891150	8 x Ø 8,0	1 x Ø 12,0	-	80	110	155	-	-
	89940	8 x Ø 8,0	1 x Ø 12,0	-	80	110	150	-	-
	89820	4 x Ø 10,0	1 x Ø 10,0	-	71	120	50	135	60
	89821	4 x Ø 10,0	1 x Ø 10,0	-	81	120	50	135	60
	89822	4 x Ø 10,0	1 x Ø 10,0	-	91	120	50	135	60
	89823	4 x Ø 10,0	1 x Ø 10,0	-	101	120	50	135	60
	89824	4 x Ø 10,0	1 x Ø 10,0	-	121	120	50	135	60
	89825	4 x Ø 10,0	1 x Ø 10,0	-	141	120	50	135	60
Type I	891053	-	-	1 x Ø 10,0	80	80	185	285	-
	891127	-	-	1 x Ø 10,0	100	100	195	295	-
	891128	-	-	1 x Ø 10,0	100	100	245	345	-
	891129	-	-	1 x Ø 10,0	100	100	295	395	-
	891130	-	-	1 x Ø 10,0	100	100	345	445	-
	891109	-	-	1 x Ø 10,0	100	100	315	415	-
	891131	-	-	1 x Ø 10,0	100	100	100	200	-
	891132	-	-	1 x Ø 10,0	100	100	150	250	-
	891125	-	-	1 x Ø 10,0	100	100	200	300	-
	891152	-	-	1 x Ø 10,0	100	100	200	300	-
	891153	-	-	1 x Ø 10,0	100	100	100	200	-
	891123	-	-	1 x Ø 10,0	100	100	250	350	-
	891126	-	-	1 x Ø 10,0	100	100	200	300	-
	891198	-	-	1 x Ø 10,0	100	100	190	-	-
Type T	891052	-	-	4 x Ø 10,0	130	100	190	290	210
	89920	-	-	4 x Ø 10,0	120	100	155	245	175
	89832	-	-	4 x Ø 10,0	130	100	150	255	170
	89810	-	-	4 x Ø 10,0	80	120	100	190	130
	89840	-	-	4 x Ø 10,0	130	100	150	240	185
	89841	-	-	4 x Ø 10,0	130	100	200	290	235

Continuation of Table A.1 Specifications of the post bases

Post base		Metal Fasteners			Post [mm]		Distances [mm]		
Type	Article No.	Screw	Bolt	Dowel	min. b	min. h	max a	$e_{F2/F3}$	$e_{F4/F5}$
Type P	891050	4 x Ø 12,0	-	-	80	80	185	-	-
	89850	4 x Ø 12,0	-	-	100	100	100	-	-
	89851	4 x Ø 12,0	-	-	100	100	150	-	-
Universal	89852	2 x Ø 10,0	-	-	100	100	300	-	-

Table A.2 Specifications of the metal fasteners according to EN 14592

Fastener type	Size			Material	Finish
	Diameter	Length	Threaded length		
Nails	4,0 mm	min 40 mm	-	$f_{u,k} \geq 600$ N/mm^2	Galvanic zinc coating
Screws	8,0 mm	min 40 mm	min 24 mm	$f_{u,k} \geq 360$ N/mm^2	Galvanic zinc coating
Screws	10,0 mm 12,0 mm	min 60 mm	min 40 mm	$f_{u,k} \geq 360$ N/mm^2	Galvanic zinc coating
Bolts	10,0 mm 12,0 mm			$f_{u,k} \geq 360$ N/mm^2	Galvanic zinc coating
Dowels	10,0 mm 12,0 mm			$f_{u,k} \geq 360$ N/mm^2	Galvanic zinc coating
The load-carrying-capacities of the metal fasteners were calculated according to Eurocode 5 for lateral loads. The contribution to the load-carrying capacity due to the rope effect was considered according to Eurocode 5.					

Annex B
Characteristic load-carrying capacities

Table B.1 Characteristic load-carrying capacities for post bases [kN]

Post base	F_1 (Compression)				F_1 (Tension)			F_2/F_3				F_4/F_5		
	Timber	Steel			Timber	Steel		Timber		Steel		Timber	Steel	
Type H														
89900	25,3	112	183		25,3	-	183	6,53	22,0	12,4	-	6,53	4,88	-
89901	25,3	112	183		25,3	-	183	7,45	22,7	12,4	-	7,27	4,88	-
89902	25,3	112	183		25,3	-	183	8,37	22,8	12,4	-	7,27	4,88	-
89903	25,3	112	183		25,3	-	183	9,29	22,8	12,4	-	7,27	4,88	-
89904	25,3	112	183		25,3	-	183	11,1	22,8	12,4	-	7,27	4,88	-
89905	25,3	112	183		25,3	-	183	13,0	22,8	12,4	-	7,27	4,88	-
	$\gamma_{M,C}$	$\gamma_{M,1}$	$\gamma_{M,2}$		$\gamma_{M,C}$	$\gamma_{M,0}$	$\gamma_{M,2}$	$\gamma_{M,T}$	$\gamma_{M,C}$	$\gamma_{M,0}$	$\gamma_{M,2}$	$\gamma_{M,T}$	$\gamma_{M,0}$	$\gamma_{M,2}$
Type U														
891051	40,4	9,05	-		5,52	1,35	-	-	-	-	-	-	-	-
891150	30,6	19,8	-		11,3	1,35	-	-	-	-	-	-	-	-
89940	30,6	6,17	-		11,3	1,35	-	-	-	-	-	-	-	-
89820	68,4	42,1	-		8,91	5,07	-	-	5,94	1,78	3,42	5,86	6,35	-
89821	75,7	42,1	-		8,91	4,17	-	-	5,94	1,42	3,42	5,86	6,35	-
89822	83,1	42,1	-		8,91	3,55	-	-	5,94	1,18	3,42	5,86	6,35	-
89823	90,4	42,1	-		8,91	3,08	-	-	5,94	1,16	3,42	5,86	6,35	-
89824	105	42,1	-		8,91	2,44	-	-	5,94	1,16	3,42	5,86	6,35	-
89825	120	42,1	-		8,91	2,02	-	-	5,94	1,16	3,42	5,86	6,35	-
	$\gamma_{M,T}$	$\gamma_{M,1}$	$\gamma_{M,2}$		$\gamma_{M,C}$	$\gamma_{M,0}$	$\gamma_{M,2}$	$\gamma_{M,T}$	$\gamma_{M,C}$	$\gamma_{M,0}$	$\gamma_{M,2}$	$\gamma_{M,T}$	$\gamma_{M,0}$	$\gamma_{M,2}$
Type I														
891053	98,5	44,8	29,0		4,98	5,79	-	-	3,90	0,66	1,07	-	-	-
891127	167	85,9	50,5		5,58	6,46	-	-	4,19	1,07	-	-	-	-
891128	167	85,9	40,1		5,58	6,46	-	-	4,19	0,96	-	-	-	-
891129	167	85,9	31,8		5,58	6,46	-	-	4,19	0,84	-	-	-	-
891130	167	85,9	25,4		5,58	6,46	-	-	4,19	0,74	-	-	-	-
891109	167	85,9	29,0		5,58	6,46	-	-	4,19	1,64	-	-	-	-
891131	181	108	108		5,58	10,2	-	-	4,19	1,68	-	-	-	-
891132	181	108	108		5,58	10,2	-	-	4,19	1,33	-	-	-	-
891125	95,0	69,1	56,8	58,8	5,58	-	58,8	-	4,19	1,01	-	-	-	-
891152	97,8	75,9	-	58,8	5,58	-	58,8	-	4,19	1,75	-	-	-	-
891153	97,8	75,9	-	58,8	5,58	-	58,8	-	4,19	2,60	-	-	-	-
891123	181	108	108		5,58	-	65,8	-	4,19	4,43	8,00			
891126	181	108	108		5,58	-	65,8	-	4,19	5,10	8,00	-	-	-
891198	167	71,2	52,5		-	-	-	-	-	-	-	-	-	-
	$\gamma_{M,T}$	$\gamma_{M,0}$	$\gamma_{M,1}$	$\gamma_{M,2}$	$\gamma_{M,C}$	$\gamma_{M,0}$	$\gamma_{M,2}$	$\gamma_{M,T}$	$\gamma_{M,C}$	$\gamma_{M,0}$	$\gamma_{M,2}$	$\gamma_{M,T}$	$\gamma_{M,0}$	$\gamma_{M,2}$

Continuation of Table B.1 Characteristic load-carrying capacities for post bases [kN]

Post base	F_1 (Compression)			F_1 (Tension)			F_2/F_3				F_4/F_5		
	Timber	Steel		Timber	Steel		Timber		Steel		Timber	Steel	
Type T													
891052	77,7	54,2	30,58	25,1	5,79	-	18,3	13,1	0,67	1,49	2,19	0,94	-
89920	109	74,1	48,6	25,1	14,0	-	11,6	18,1	1,13	3,14	1,86	1,76	-
89832	92,0	99,8	108	25,1	10,2	-	13,1	18,3	1,31	-	2,43	2,48	-
89810	127	75,1	109	21,8	-	65,3	17,4	16,5	3,06	4,32	1,79	4,47	-
89840	107,0	105	108	25,1	-	33,8	13,1	18,3	6,57	-	2,85	-	2,48
89841	107	105	108	25,1	-	33,8	13,1	18,3	5,42	-	2,83		2,55
	$\gamma_{M,T}$	$\gamma_{M,0}$	$\gamma_{M,1}$	$\gamma_{M,C}$	$\gamma_{M,0}$	$\gamma_{M,2}$	$\gamma_{M,T}$	$\gamma_{M,C}$	$\gamma_{M,0}$	$\gamma_{M,2}$	$\gamma_{M,T}$	$\gamma_{M,0}$	$\gamma_{M,2}$
Type P													
891050	71,9	59,2	34,5	-	-	-	-	-	-	-	-	-	-
89850	111	100	108	-	-	-	-	-	-	-	-	-	-
89851	111	100	108	-	-	-	-	-	-	-	-	-	-
	$\gamma_{M,T}$	$\gamma_{M,0}$	$\gamma_{M,1}$	$\gamma_{M,C}$	$\gamma_{M,0}$	$\gamma_{M,2}$	$\gamma_{M,T}$	$\gamma_{M,C}$	$\gamma_{M,0}$	$\gamma_{M,2}$	$\gamma_{M,T}$	$\gamma_{M,0}$	$\gamma_{M,2}$
Universal													
89852	132	116	34,3	-	-	-	-	-	-	-	-	-	-
	$\gamma_{M,T}$	$\gamma_{M,0}$	$\gamma_{M,1}$	$\gamma_{M,C}$	$\gamma_{M,0}$	$\gamma_{M,2}$	$\gamma_{M,T}$	$\gamma_{M,C}$	$\gamma_{M,0}$	$\gamma_{M,2}$	$\gamma_{M,T}$	$\gamma_{M,0}$	$\gamma_{M,2}$

$\gamma_{M,T}$ = partial factor for solid timber according to EN 1995-1-1 and national annex
$\gamma_{M,C}$ = partial factor for connections according to EN 1995-1-1 and national annex
$\gamma_{M,0}; \gamma_{M,1}; \gamma_{M,2}$ = partial factor according to EN 1993-1-1 and national annex

Definitions of forces, their directions and eccentricity

- Force F_1: tensile or compression load

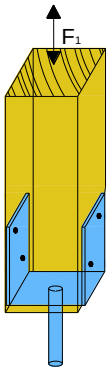

- Force F_2 / F_3: horizontal load parallel to the side plates of the post base and perpendicular to the fasteners

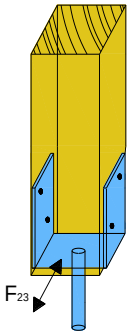

- Force F_4 / F_5: horizontal load perpendicular to the side plates of the post base and parallel to the fasteners

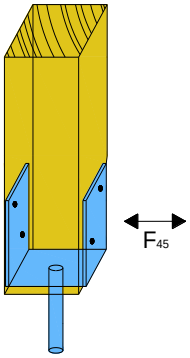

Acting forces

F_1	axial force (tension or compression) acting along the central axis of the joint
F_2 and F_3	horizontal force parallel to the side plates of the post base acting with the lever arm $e_{F2/F3}$ above the foundation
F_4 and F_5	horizontal force perpendicular to the side plates of the post base acting with the lever arm $e_{F4/F5}$ above the foundation

Combined forces
If the forces F_1 and F_2/F_3 or F_4/F_5 act at the same time, the following inequality shall be fulfilled:

$$\sum \frac{F_{i,d}}{R_{i,d}} \leq 1$$

The forces F_2 and F_3 or F_4 and F_5 are forces with opposite direction. Therefore only one force F_2 or F_3, and F_4 or F_5, respectively, is able to act simultaneously with F_1.

Zeichnung Pfostenträger Typ:H

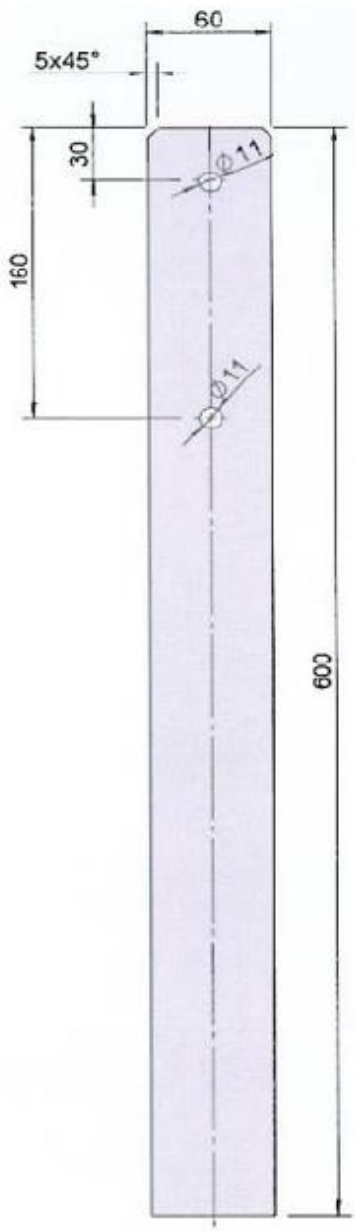

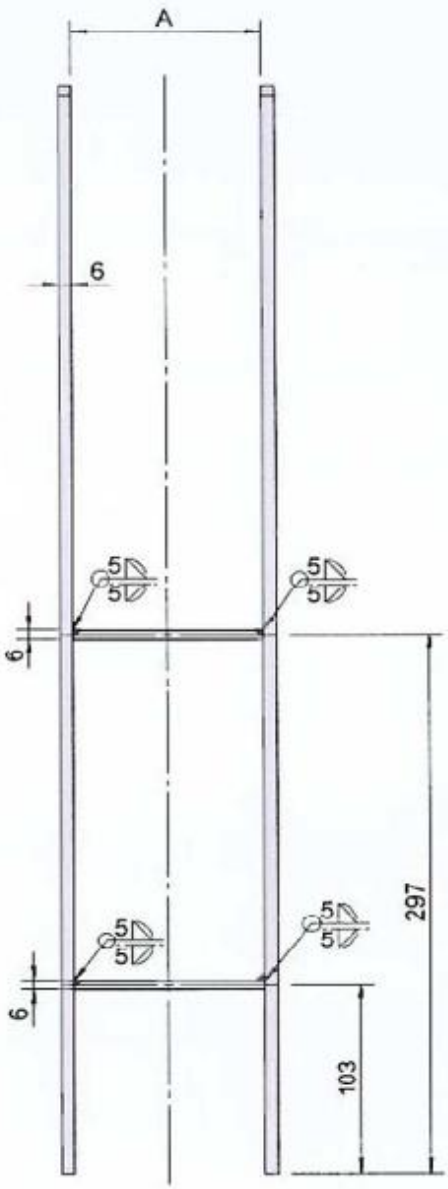

Gutzeit Verbindungssysteme GmbH & Co
Rudolf Diesel Str.1
58730 Fröndenberg
Tele: 02373-979265

Zeichnungsnummer: 89900-89905			
Material: S235 JR /EN10025:2004			
Korrosionsschutz:55µm gemäß DIN EN 1461			
Bearbeiter: Hr.Tewes		Datum: Rev 2 / 07.01.2015	
	A =	89900	71 mm
	A =	89901	81 mm
	A =	89902	91 mm
	A =	89903	101mm
	A =	89904	121mm
	A =	89905	141mm

REV 2 / 07.01.2015 D.Tewes

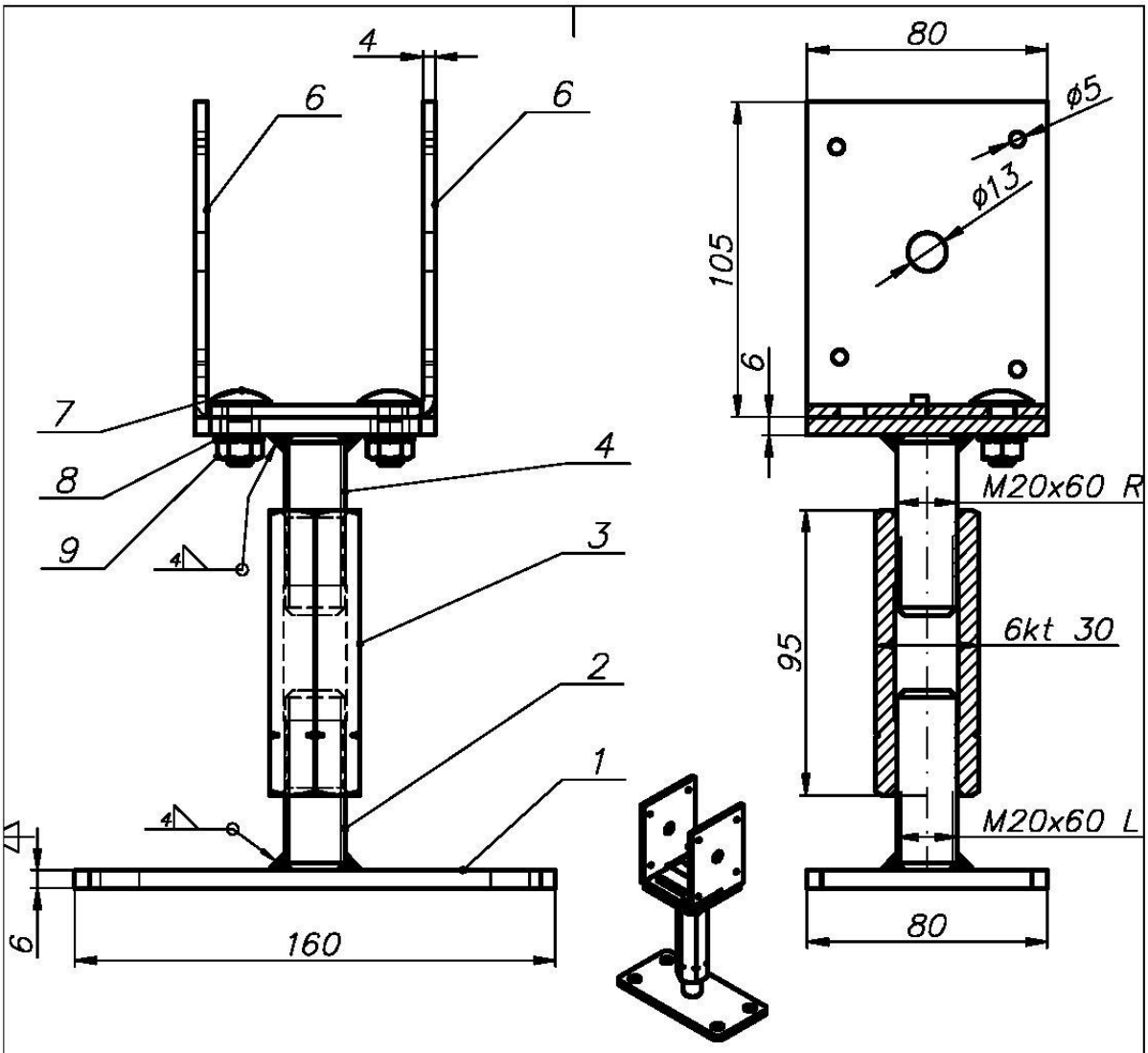

Poz.	Szt.	Nr. rys./Ozn.	Nazwa	Materiał	Uwagi
9	2	DIN 555–5	Mutter M8		
8	2	ISO 7093	Schaube A8,4		
7	2	DIN 603	Schraube M8x20		
6	2	891051 / 6	Winkel 105x75x4	S235JR	
5	1	891050 / 5	Trägeplatte 6x80x80	S235JR	
4	1	DIN 976	Gewindenbolzen M20x60–R	S235JR+P+Mo+AR	
3	1	891050 / 3	Gewindehülse M20x95	S235JR	
2	1	DIN 976	Gewindenbolzen M20x60–L	S235JR+P+Mo+AR	
1	1	891050 / 1	Grundplatte 6x80x160	S235JR	

Lista elementów

Poz.	Ilość: 1	Materiał:		Ciężar:	
Projektował M.Mielcarek	Zmienił	Zatwierdził – data	Plik GUTZEIT	Data 31/07/2013	Skala
Lakfam			891051 – PF–TU		
			891051	Edycja 0	Arkusz 1/1

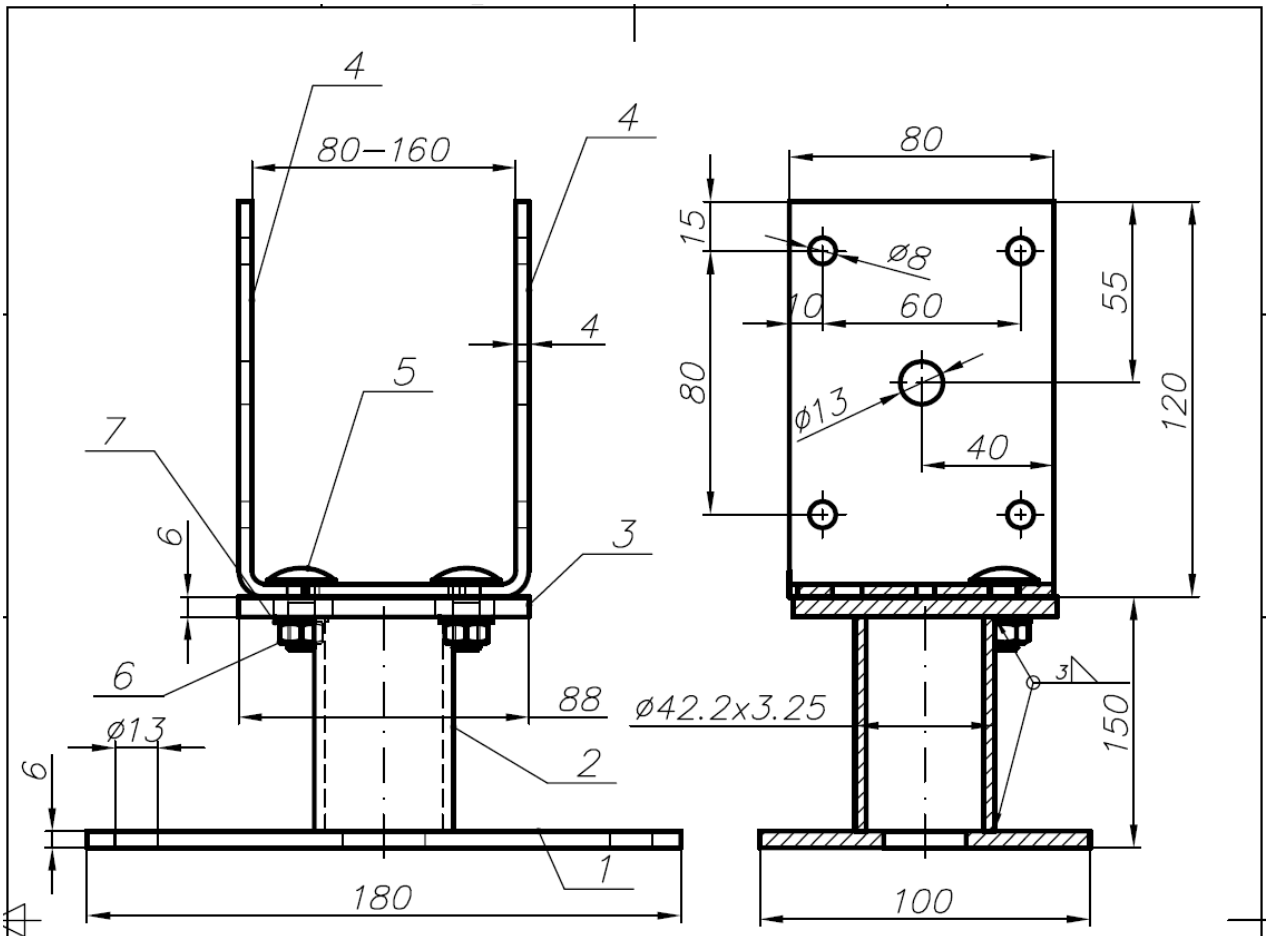

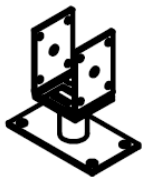

Poz.	Szt.	Nr. rys./Ozn.	Nazwa	Materiał	Uwagi
6	2	DIN 555–5	Mutter M8		
7	2	DIN 125	Scheibe A8,4		
5	2	DIN 603	Schraube M8x20		
4	2	89940 /6	Winkel 120x67x4	S235JR	
3	1	89940 / 5	Trägeplatte 6x80x8	S235JR	
2	1	891150 / 2	Rohr 42,2x3,25 L=139	S235JR	
1	1	89940 / 1	Grundplatte 6x100x180	S235JR	

Lista elementów

Poz.	Ilość: 1	Materiał:		Ciężar:	
Projektował M.Mielcarek	Zmienił	Zatwierdził – data	Plik Gutzeit	Data 31/07/2013	Skala

Lakfam	891150		
	891150	Edycja 0	Arkusz 1/1

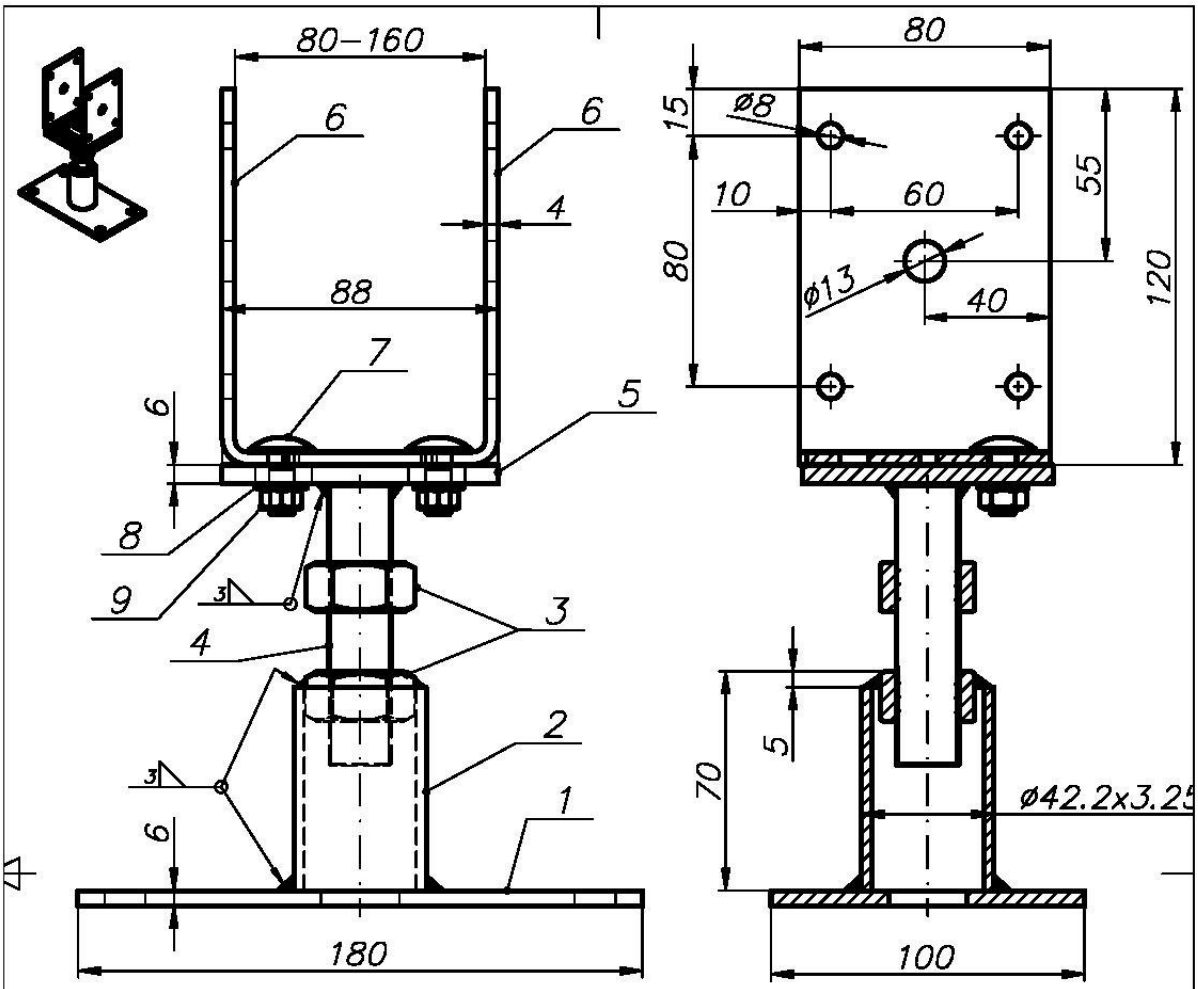

Poz.	Szt.	Nr. rys./Ozn.	Nazwa	Materiał	Uwagi
9	2	DIN 555–5	Mutter M8		
8	2	DIN 125	Schelbe A8,4		
7	2	DIN 603	Schraube M8x20		
6	2	89940 / 6	Winkel 120x67x4	S235JR	
5	1	89940 / 5	Trägeplatte 6x80x88	S235JR	
4	1	DIN 976	Gewindebolzen M20x90	S235JR+P+Mo+AR	
3	2	DIN 555–5	Mutter M20		
2	1	89940 / 2	Rohr 42,2x3,25 L=65	S235JR	
1	1	89940 / 1	Grundplatte 6x100x180	S235JR	

Lista elementów

Poz.	Ilość: 1	Materiał:		Ciężar:	
Projektował M.Mielcarek		Zmienił	Zatwierdził – data	Plik GUTZEIT	Data 31/07/2013	Skala
Lakfam				89940	
				89940	Edycja 0 / Arkusz 1/1

Zeichnung Pfostenträger Typ:U

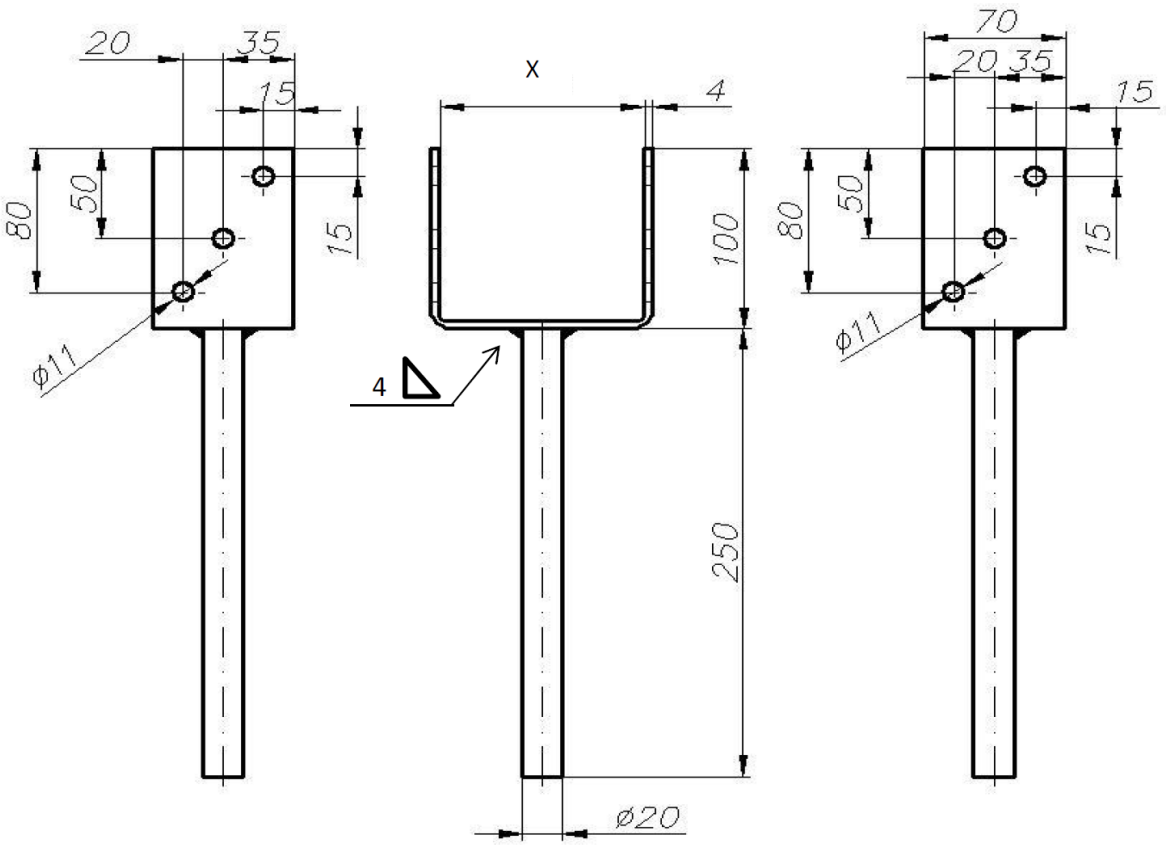

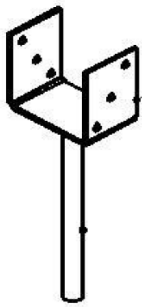

Gutzeit Verbindungssysteme GmbH & Co.	Zeichnungsnummer:	89820-89825	
Rudolf Diesel Str.1	Material:	S235JR / EN10025: 2004	
58730 Fröndenberg	Korrosionsschutz: 55µm gemäß DIN EN1461		
Tele: 02373-979265	Bearbeiter: Hr.Tewes		Datum: 14.06.2013
	89820	X =	71 mm
	89821	X =	81 mm
	89822	X =	91 mm
	89823	X =	101 mm
	89824	X =	121 mm
	89825	X =	141 mm

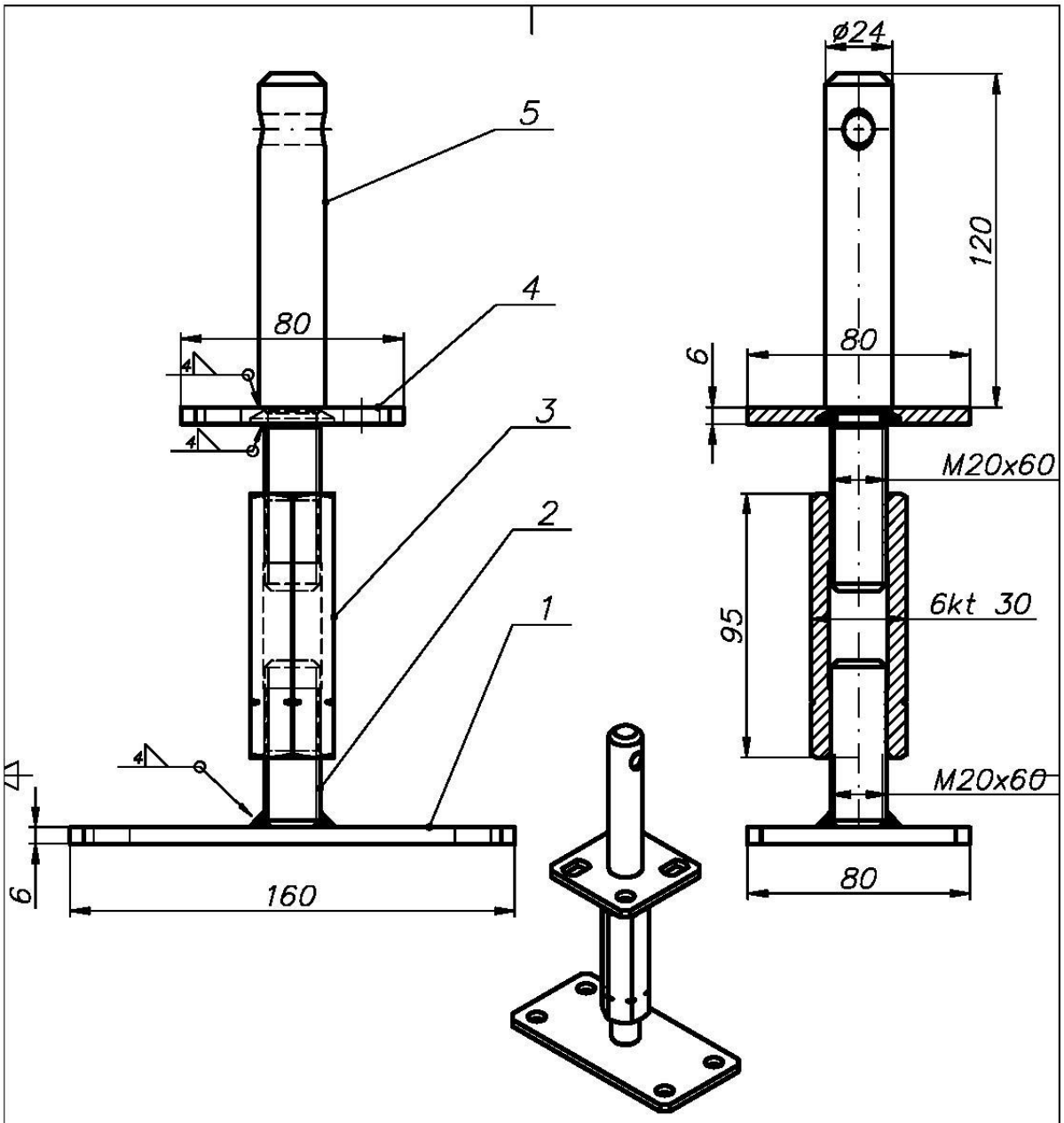

Poz.	Szt.	Nr. rys./Ozn.	Nazwa	Materiał	Uwagi
5	1	891053 / 5	Bolzen 24x186	S235JR	
4	1	891053 / 4	Trägeplatte 6x80x80	S235JR	
3	1	891050 / 3	Gewindehülse M20x95	S235JR	
2	1	DIN 976	Gewindebolzen M20x60 L	S235JR+P+Mo+AR	
1	1	891050 / 1	Grundplatte 6x80x160	S235JR	

Lista elementów

Poz.	Ilość: 1	Materiał:			Ciężar:	
Projektował M. Mielcarek		Zmienił	Zatwierdził – data	Plik GUTZEIT	Data 31/07/2013	Skala
Lakfam		891053 – PF–TZ				
		891053			Edycja 0	Arkusz 1/1

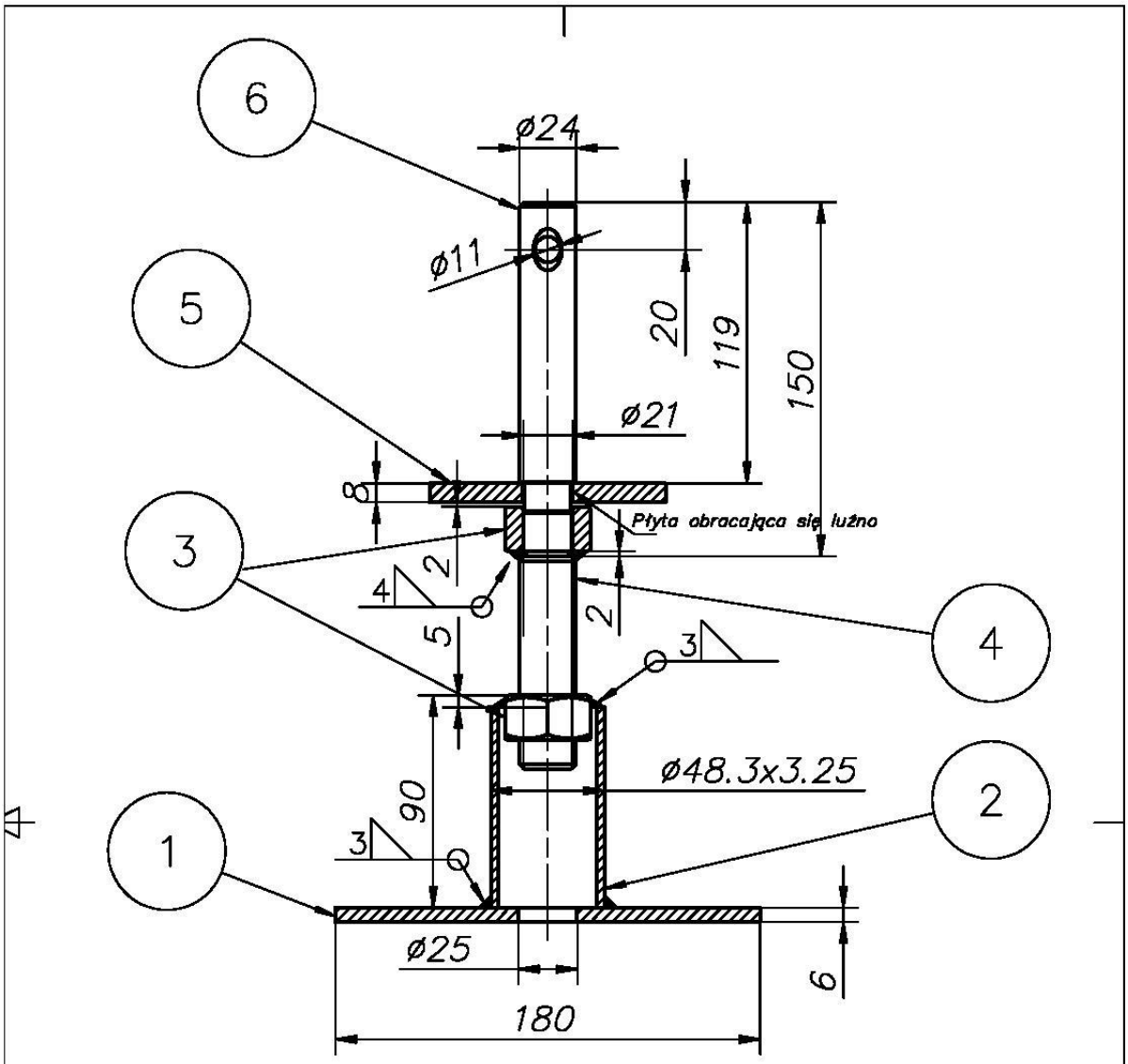

Nr	Ilość	Opis	Norma	Materiał
6	1	891127 / 6	Bolzen 24x150	S235JR
5	1	891127 / 5	Trägeplatte 8x100x100	S235JR
4	1	DIN 976	Gewindebolzen M24x90	S235JR+P+Mo+AR
3	2	DIN 934	Mutter M24	
2	1	891127 / 2	Rohr 48,3x3,25 L=85	S235JR
1	1	891127 / 1	Grundplatte 6x100x180	S235JR

Poz.	Ilość:	Materiał:			Ciężar:	
Projektował M.Mielcarek		Zmienił	Zatwierdził – data	Plik Gutzeit	Data 31/07/2013	Skala
Lakfam					891127	
					891127	Edycja 0 / Arkusz 1/1

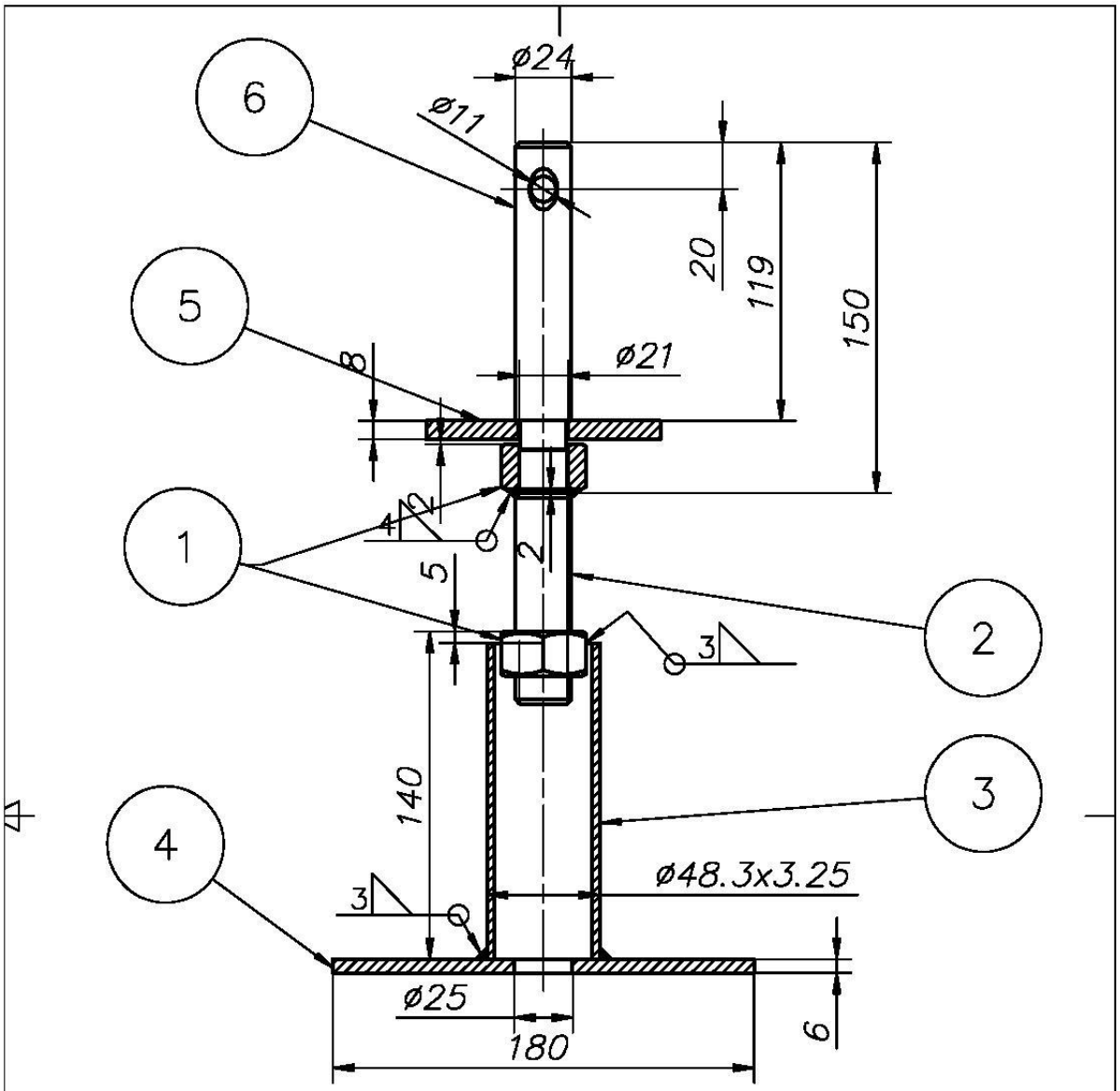

Nr	Ilość	Opis	Norma	Materiał
6	1	891127 / 6	Bolzen 24x150	S235JR
5	1	891127 / 5	Trägeplatte 8x100x100	S235JR
4	1	DIN 976	Gewindebolzen M24x90	S235JR+P+Mo+AR
3	1	DIN 934	Mutter M24	
2	1	891128 / 2	Rohr 48,3x3,25 L=135	S235JR
1	2	891127 / 1	Grundplatte 6x100x180	S235JR

Poz.	Ilość:	Materiał:			Ciężar:	
Projektował M.Mielcarek		Zmienił	Zatwierdził – data	Plik GUTZEIT	Data 31/07/2013	Skala
Lakfam					891128	
					891128	Edycja 0 / Arkusz 1/1

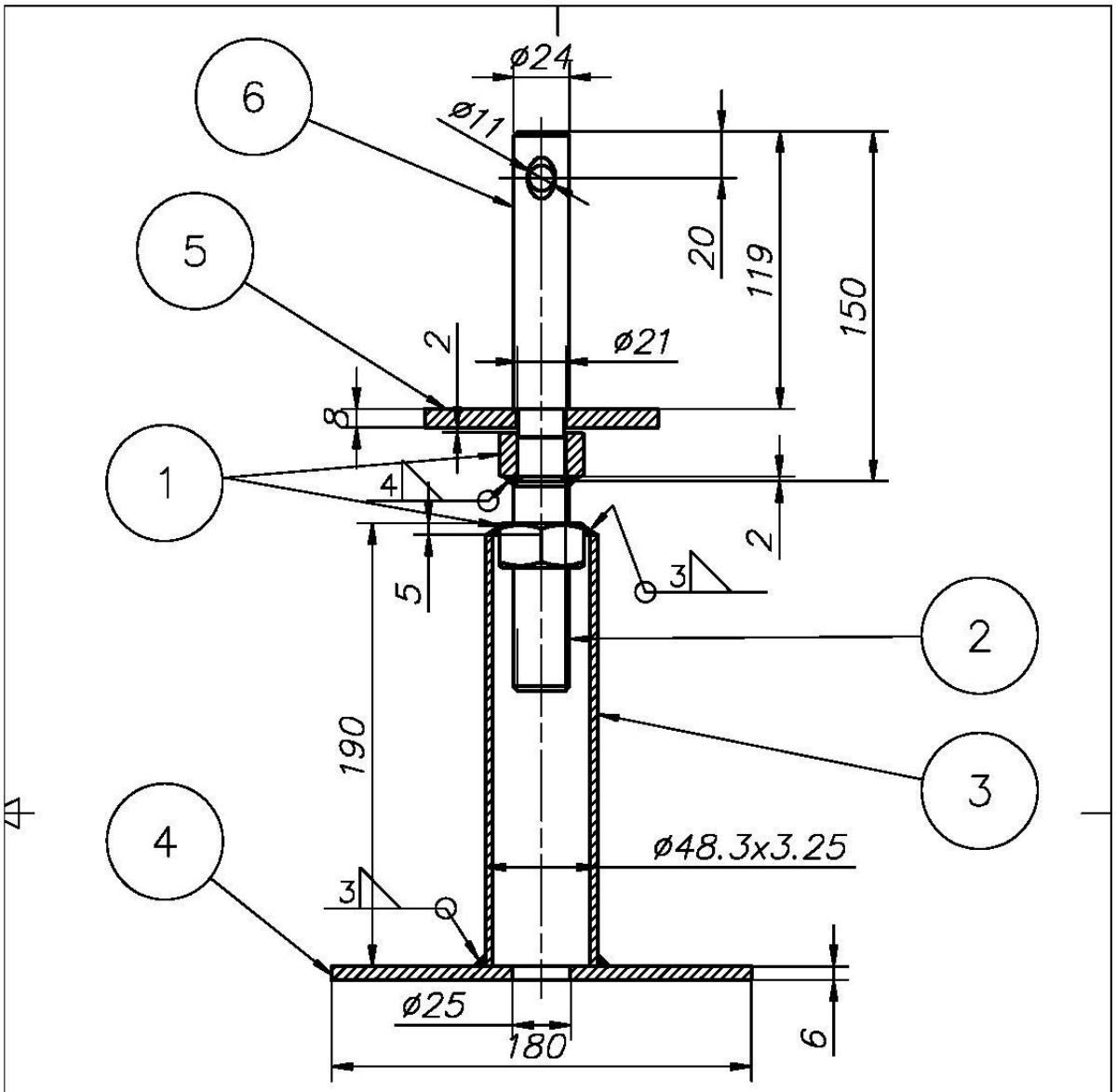

Nr	Ilość	Opis	Norma	Materiał
6	1	891127 / 6	Bolzen 24x150	S235JR
5	1	891127 / 5	Trägeplatte 8x100x100	S235JR
4	1	DIN 976	Gewindebolzen M24x90	S235JR+P+Mo+AR
3	1	DIN 934	Mutter M24	
2	1	891129 / 2	Rohr 48,3x3,25 L=185	S235JR
1	2	891127 / 1	Grundplatte 6x100x180	S235JR

Poz.	Ilość:	Materiał:			Ciężar:	
Projektował M.Mielcarek		Zmienił	Zatwierdził – data	Plik GUTZEIT	Data 31/07/2013	Skala
Lakfam					891129	
				891129	Edycja 0	Arkusz 1/1

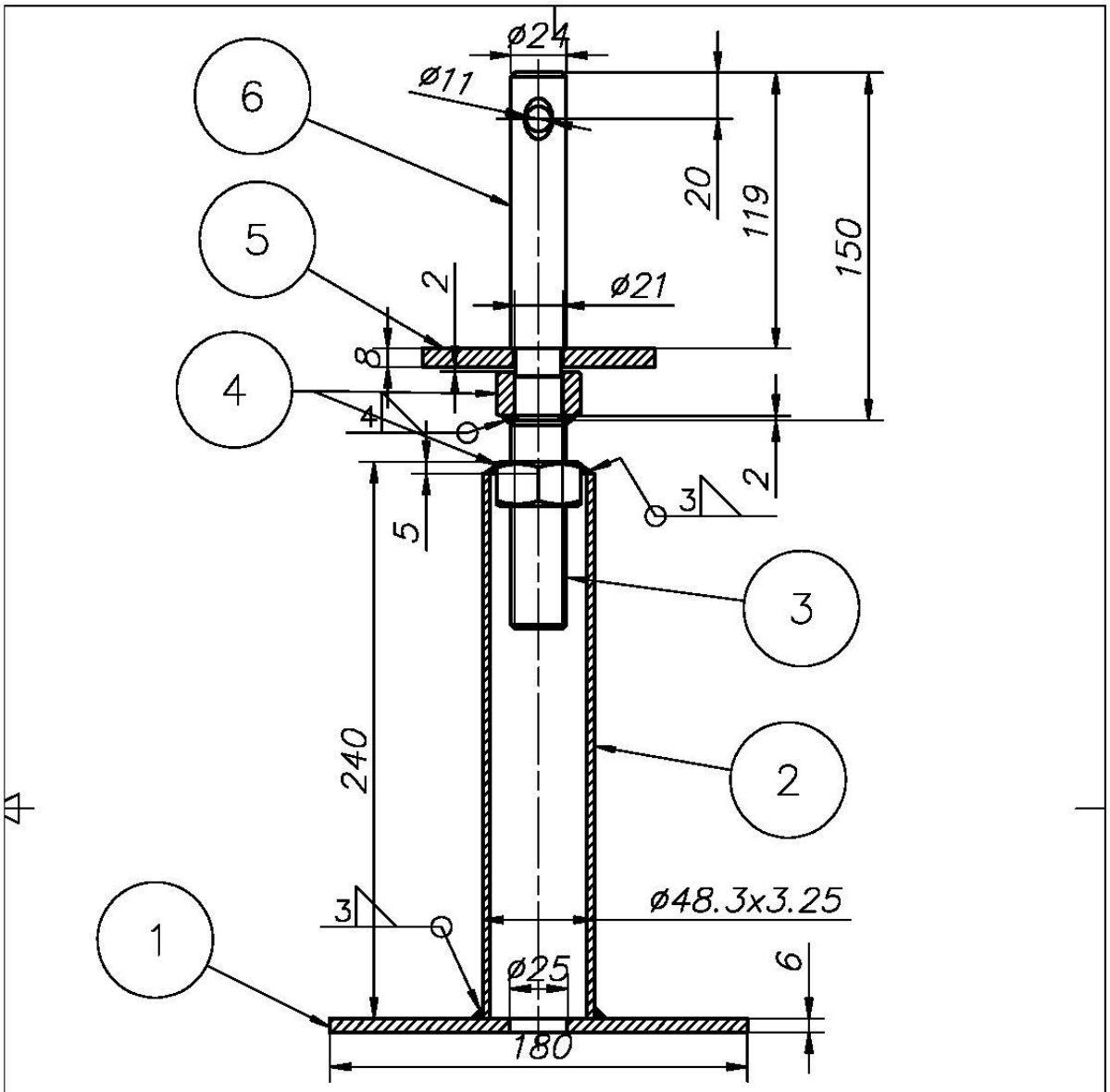

Nr	Ilość	Opis	Norma	Materiał
6	1	891127 / 6	Bolzen 24x150	S235JR
5	1	891127 / 5	Trägeplatte 8x100x100	S235JR
4	2	DIN 934	Mutter M24	
3	1	DIN 976	Gewindebolzen M24x90	S235JR+C
2	1	891130 / 2	Rohr 48,3x3,25 L=235	S235JR
1	1	891127 / 1	Grundplatte 6x100x180	S235JR

Poz.	Ilość:	Materiał:			Ciężar:	
Projektował M.Mielcarek		Zmienił	Zatwierdził – data	Plik GUTZEIT	Data 31/07/2013	Skala
Lakfam				891130		
				891130	Edycja 0	Arkusz 1/1

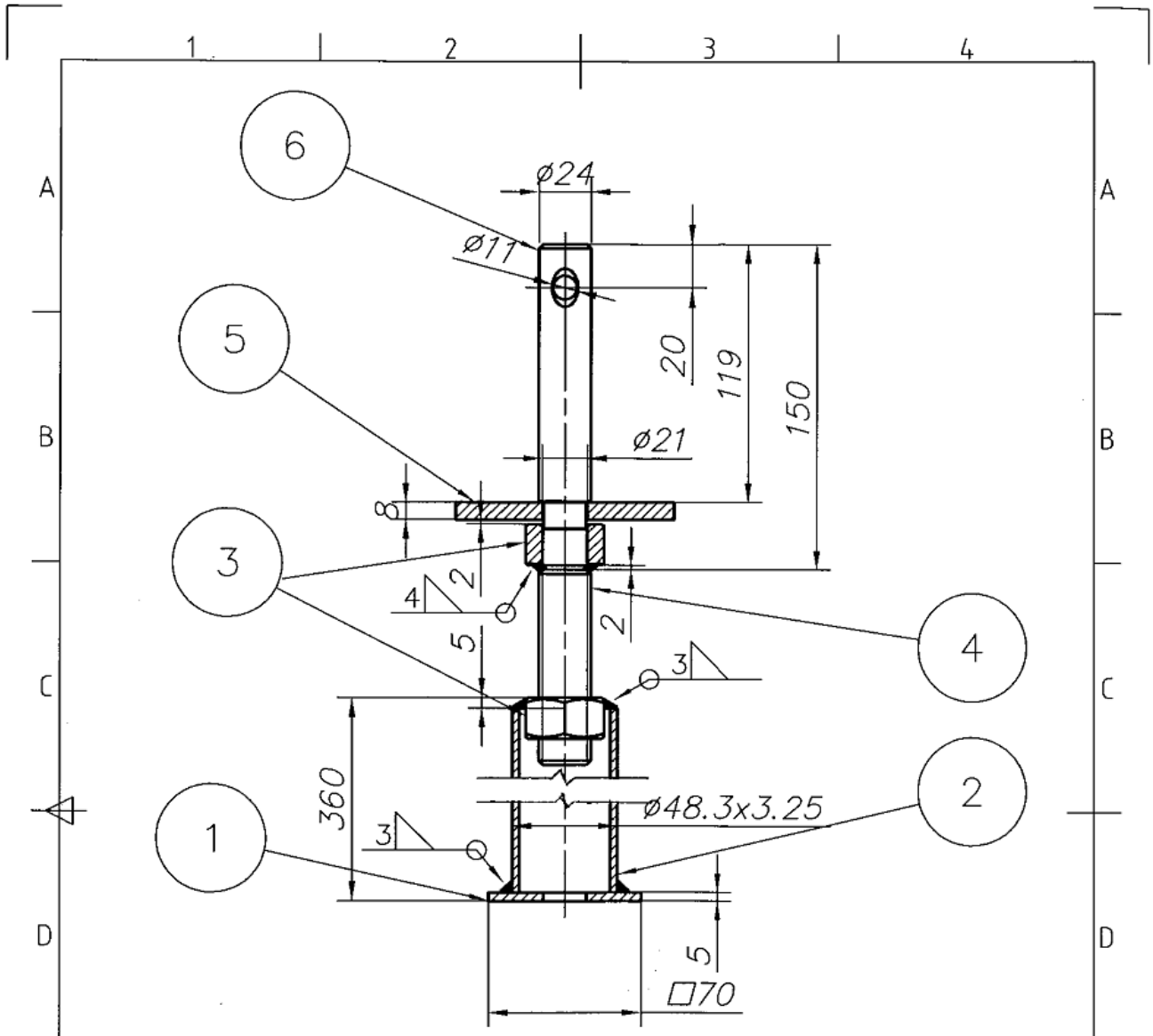

Nr	Ilość	Opis	Normia	Materiał
6	1	891127 / 6	Bolzen 24x150	S235JR
5	1	891127 / 5	Trägeplatte 8x100x100	S235JR
4	1	DIN 976	Gewindebolzen M24x90	
3	2	DIN 934	Mutter M24	
2	1	891109 / 2	Rohr 48,3x3,25 L=355	S235JR
1	1	891109 / 1	Grundplatte 5x70x70	S235JR

Poz.	Ilość:	Materiał:			Ciężar:	
Projektował M.Mielcarek		Zmienił	Zatwierdził – data	Plik GUTZEIT	Data 31/07/2013	Skala
Lakfam					891109	
				891109	Edycja 0	Arkusz 1/1

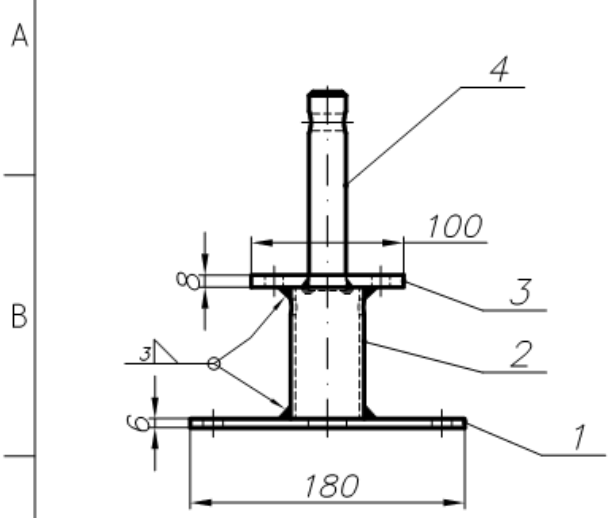

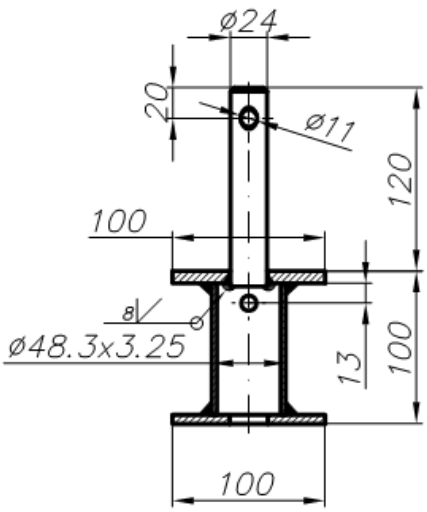

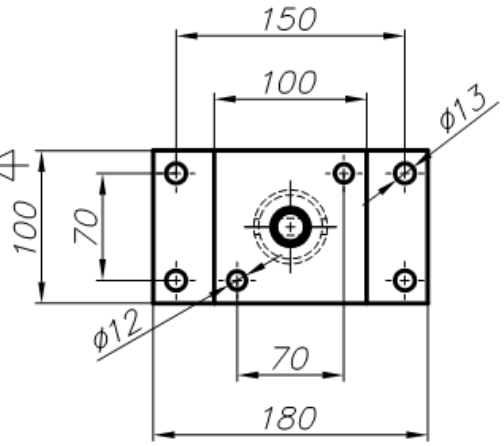

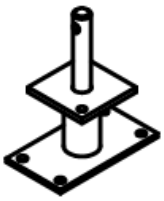

Poz.	Szt.	Nr. rys./Ozn.	Nazwa	Materiał	Uwagi
4	1	891108 / 1	Bolzen 24x133	S235JR	
3	1	891108 / 2	Trägeplatte 8x100x100	S235JR	
2	1	891131 / 2	Rohr 48,3x3,25 L=86	S235JR	
1	1	89832 / 1	Grundplatte 6x100x180	S235JR	

Lista elementów

Poz.	Ilość: 1	Materiał:			Ciężar:	
Projektował M.Mielcarek		Zmienił	Zatwierdził – data	Plik GUTZEIT	Data 31/07/2013	Skala

Lakfam

891131

891131 | Edycja 0 | Arkusz 1/1

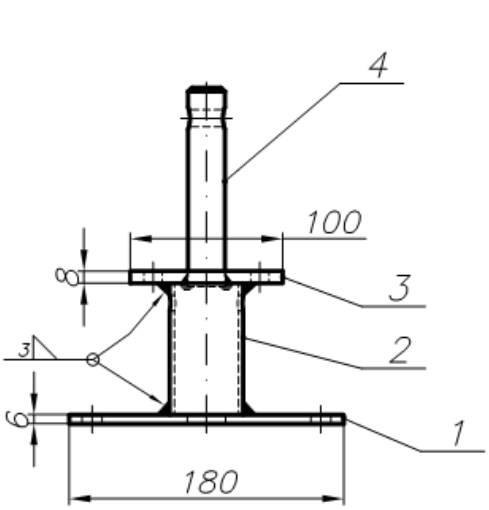

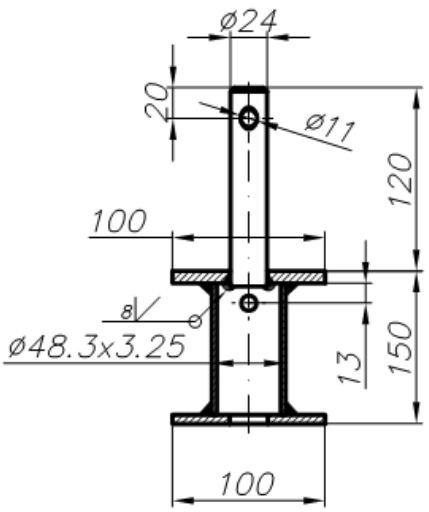

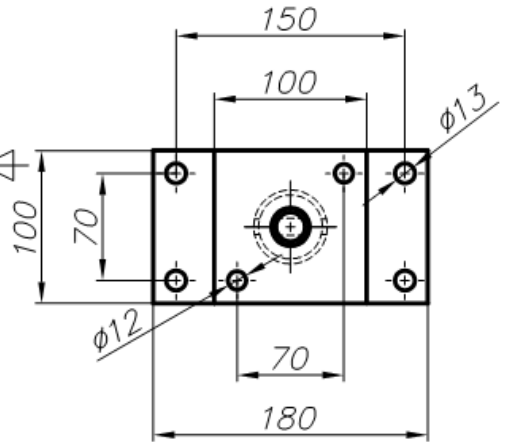

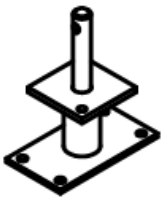

Poz.	Szt.	Nr. rys./Ozn.	Nazwa	Materiał	Uwagi
4	1	891108 / 1	Bolzen 24x133	S235JR	
3	1	891108 / 2	Trägeplatte 8x100x100	S235JR	
2	1	891132 / 2	Rohr 48,3x3,25 L=136	S235JR	
1	1	89832 / 1	Grundplatte 6x100x180	S235JR	

Lista elementów

Poz.	Ilość: 1	Materiał:			Ciężar:
Projektował M. Mielcarek	Zmienił	Zatwierdził – data	Plik Gutzeit	Data 13–08–2009	Skala
Lakfam			891132		
			891132	Edycja 0	Arkusz 1/1

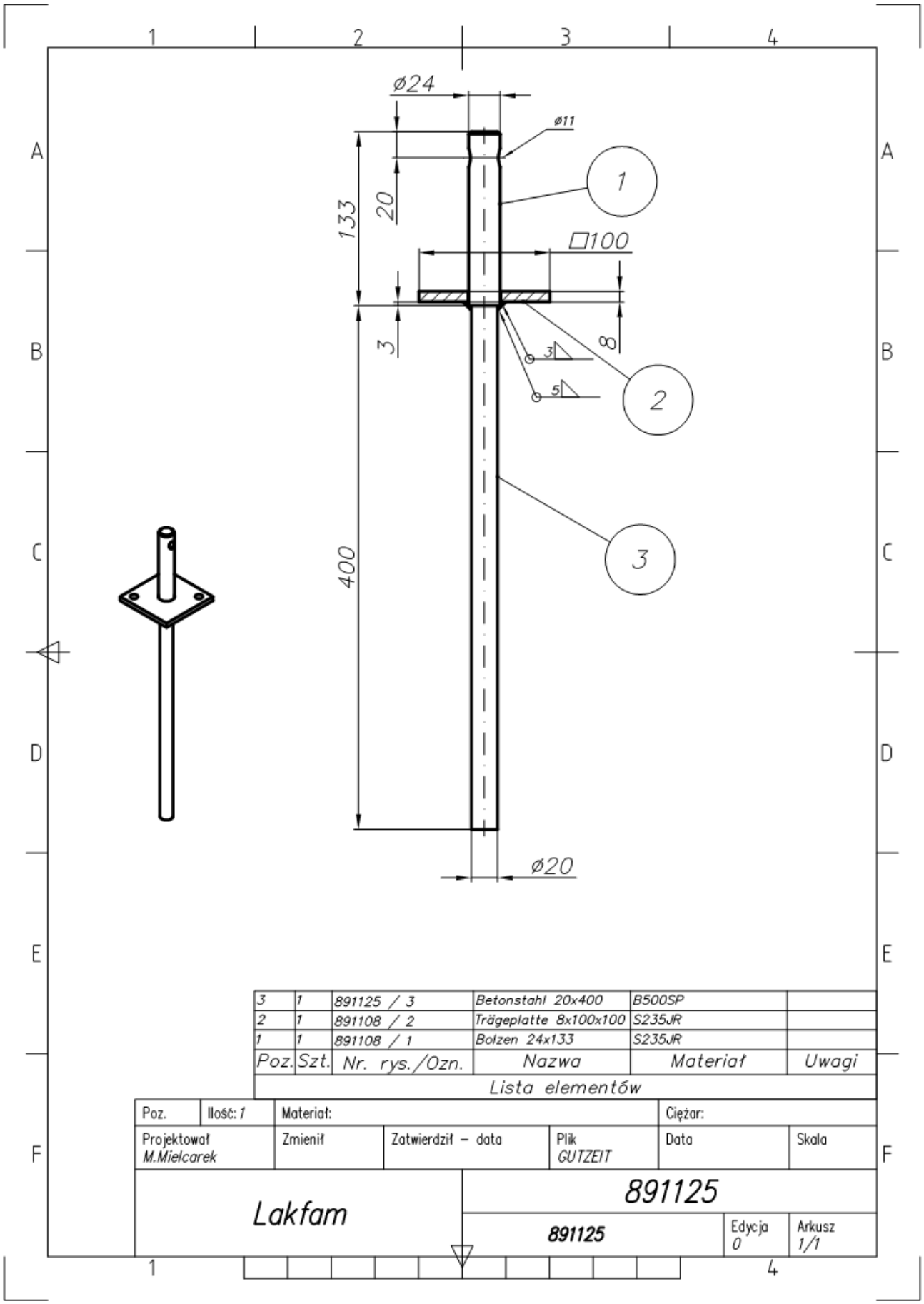

Poz.	Szt.	Nr. rys./Ozn.	Nazwa	Materiał	Uwagi
3	1	891125 / 3	Betonstahl 20x400	B500SP	
2	1	891108 / 2	Trägeplatte 8x100x100	S235JR	
1	1	891108 / 1	Bolzen 24x133	S235JR	

Lista elementów

Poz.	Ilość: 1	Materiał:			Ciężar:	
Projektował M.Mielcarek		Zmienił	Zatwierdził – data	Plik GUTZEIT	Data	Skala
Lakfam					891125	
				891125	Edycja 0	Arkusz 1/1

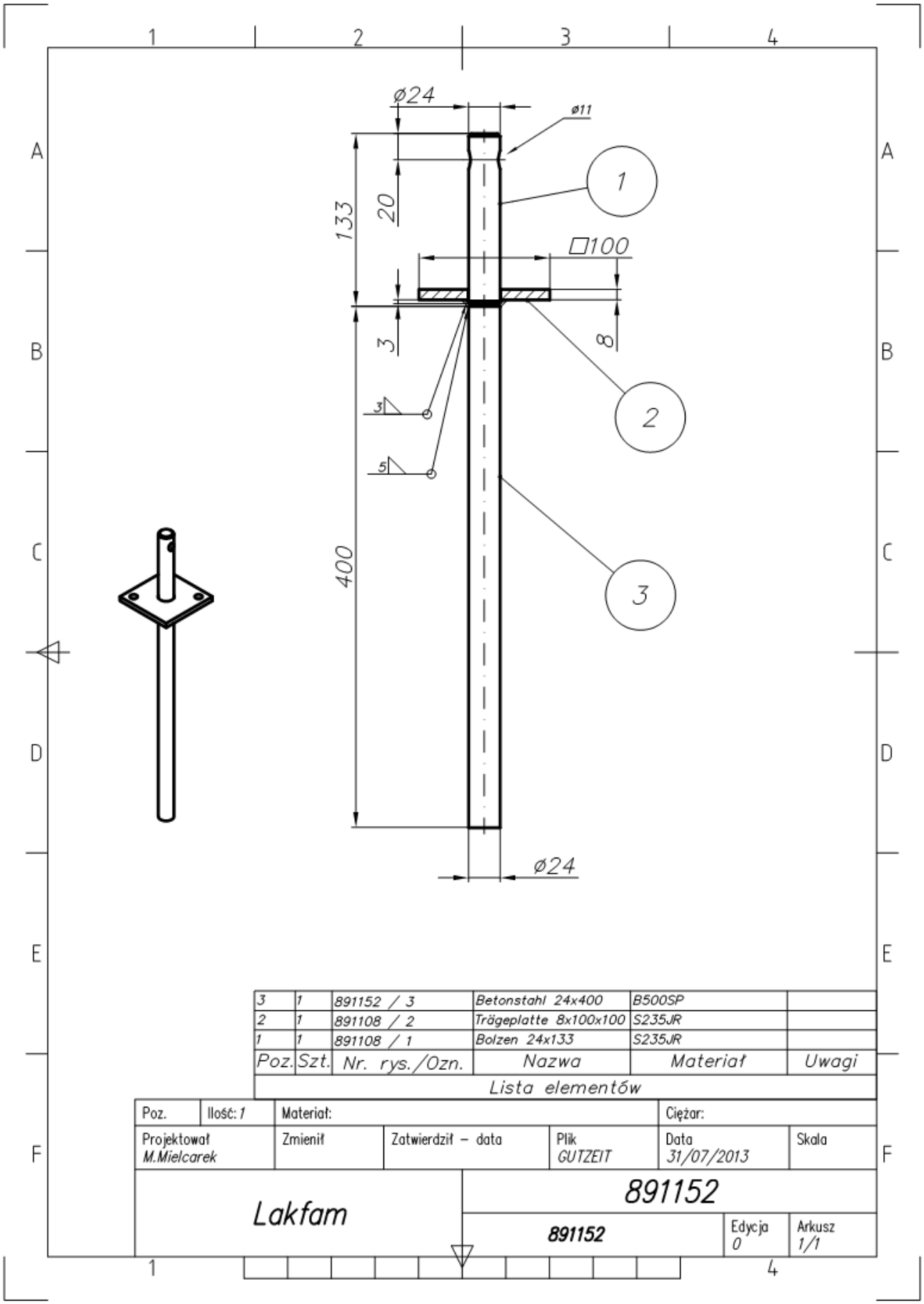

3	1	891152 / 3	Betonstahl 24x400	B500SP	
2	1	891108 / 2	Trägeplatte 8x100x100	S235JR	
1	1	891108 / 1	Bolzen 24x133	S235JR	
Poz.	Szt.	Nr. rys./Ozn.	Nazwa	Materiał	Uwagi

Lista elementów

Poz.	Ilość: 1	Materiał:		Ciężar:	
Projektował M.Mielcarek	Zmienił	Zatwierdził – data	Plik GUTZEIT	Data 31/07/2013	Skala
Lakfam				891152	
				891152	Edycja 0 / Arkusz 1/1

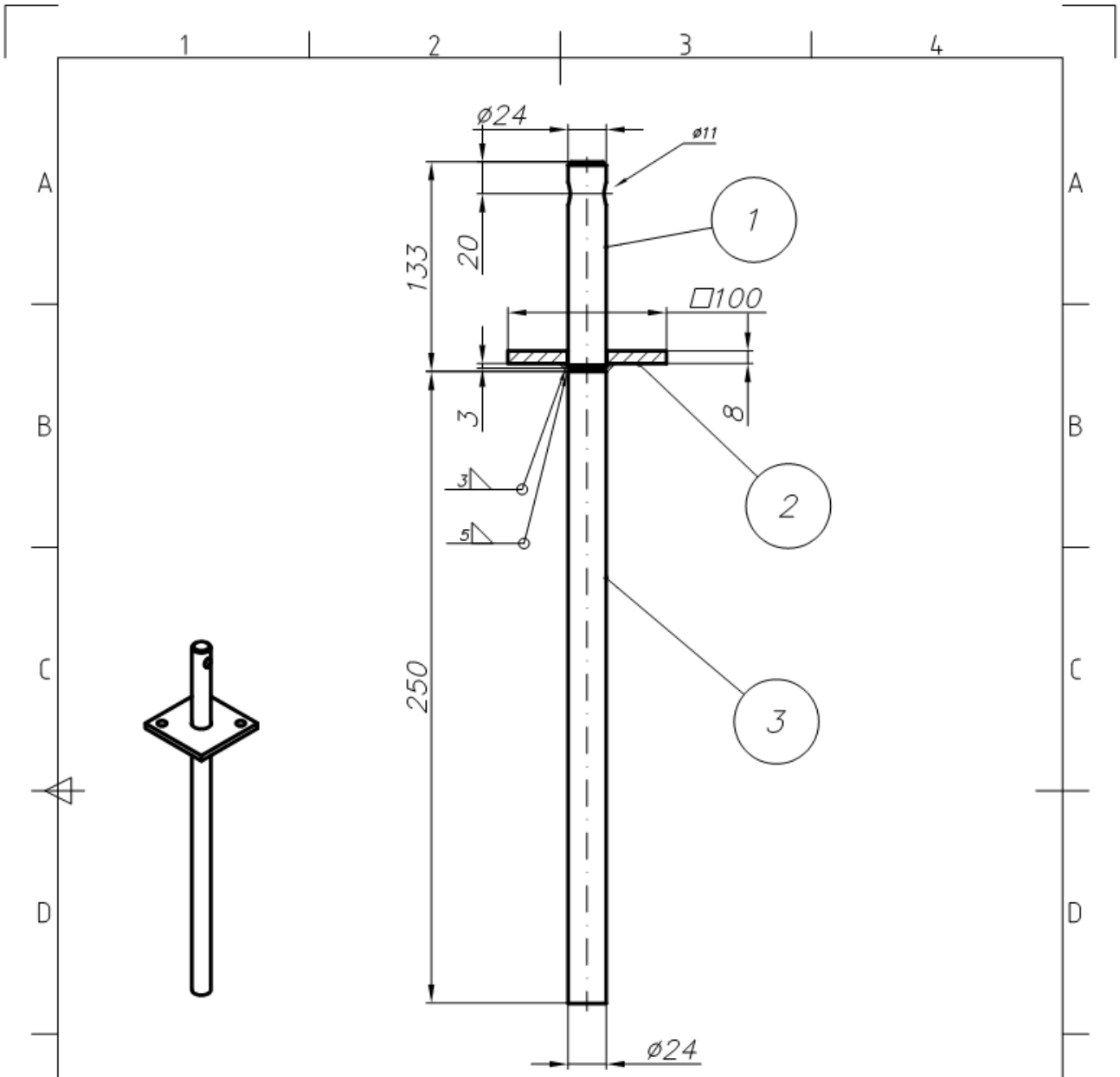

3	1	891153 / 3	Betonstahl 24x250	B500SP	
2	1	891108 / 2	Trägeplatte 8x100x100	S235JR	
1	1	891108 / 1	Bolzen 24x133	S235JR	
Poz.	Szt.	Nr. rys./Ozn.	Nazwa	Materiał	Uwagi

Lista elementów

Poz.	Ilość: 1	Materiał:		Ciężar:	
Projektował M.Mielcarek	Zmienił	Zatwierdził – data	Plik GUTZEIT	Data 31/07/2013	Skala
Lakfam				891153	
			891153	Edycja 0	Arkusz 1/1

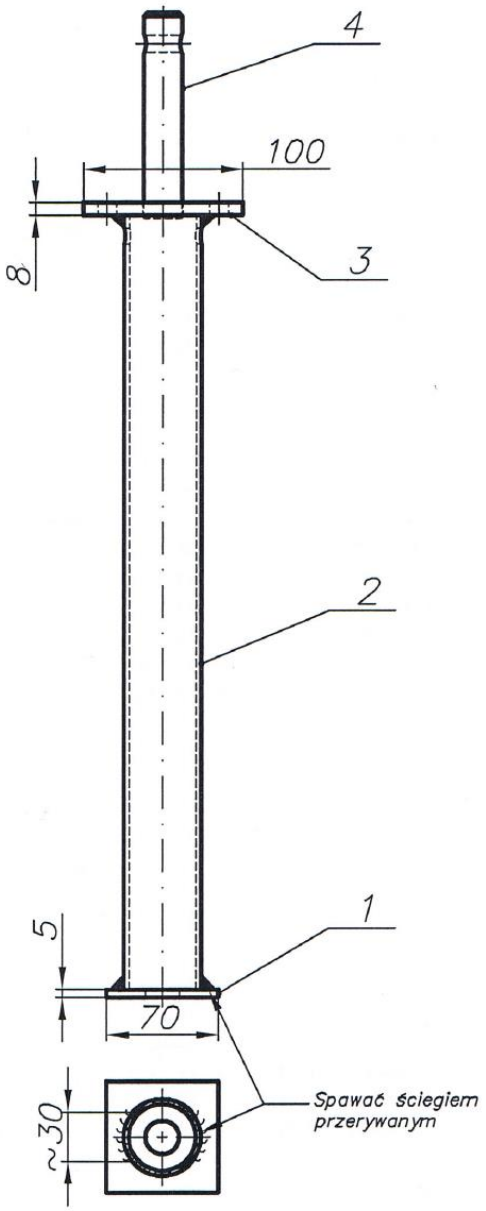

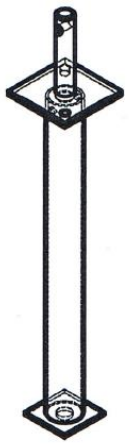

Poz.	Szt.	Nr. rys./Ozn.	Nazwa	Materiał	Uwagi
4	1	PRĘT 24X130	Pręt 24 L=130	D=24	L=130
3	1	PŁYTA	Płyta	8x100x100	
2	1	RURA	Rura 48.3x2,6	R 48.3x2,6	L= 487
1	1	PODSTAWA	Podstawa	5x70x70	

Lista elementów

Poz.	Mat: S 235	Nr wytopu::		Ciężar:	
Projektował J Ramut	Zmienił	Zatwierdził – data	Plik Gutzeit	Data 30-07-2009	Skala

Podpora 891123

891123 / 1	Edycja 0	Arkusz 1/1

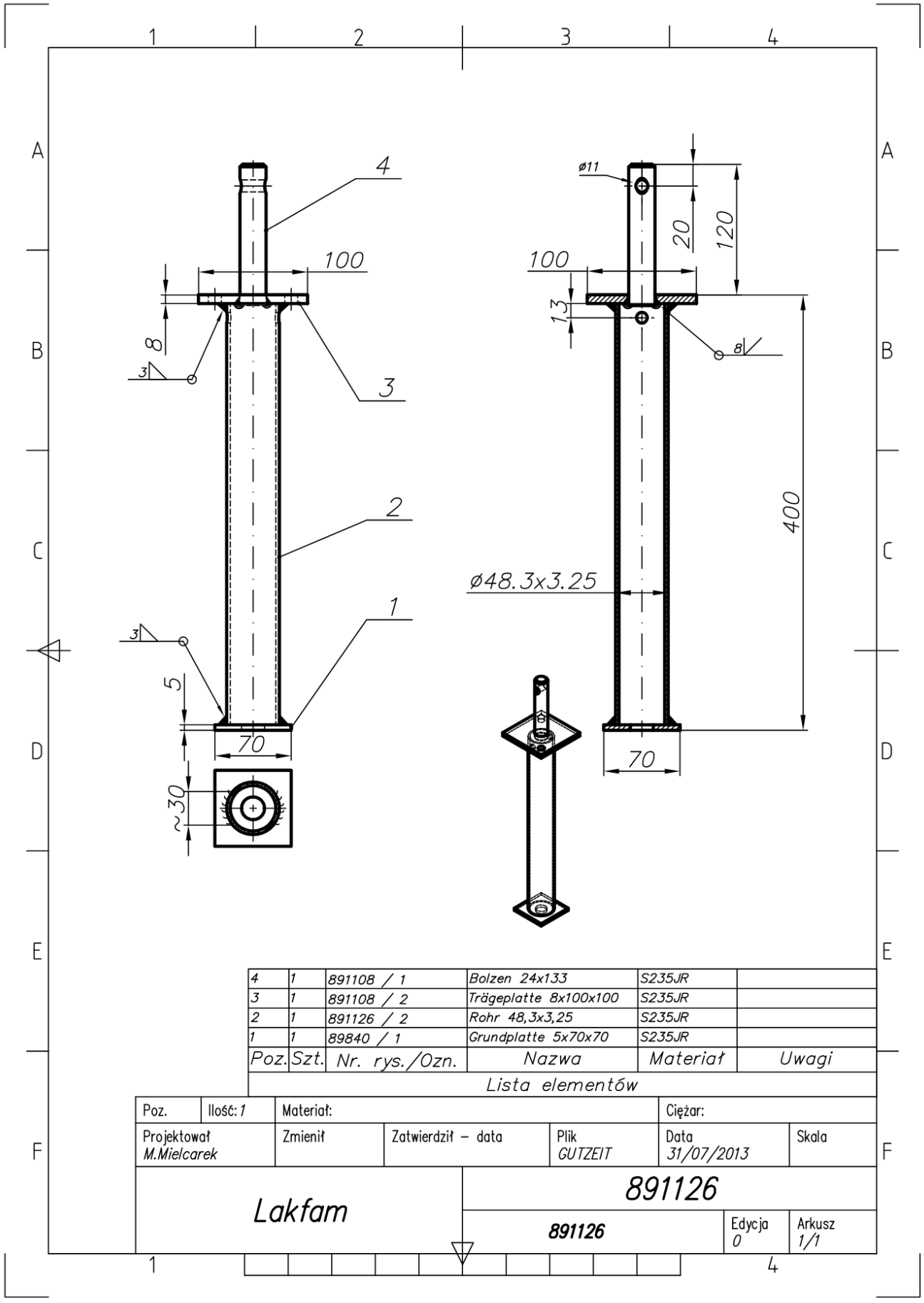

Poz.	Szt.	Nr. rys./Ozn.	Nazwa	Materiał	Uwagi
4	1	891108 / 1	Bolzen 24x133	S235JR	
3	1	891108 / 2	Trägeplatte 8x100x100	S235JR	
2	1	891126 / 2	Rohr 48,3x3,25	S235JR	
1	1	89840 / 1	Grundplatte 5x70x70	S235JR	

Lista elementów

Poz.	Ilość: 1	Materiał:			Ciężar:	
Projektował M.Mielcarek		Zmienił	Zatwierdził – data	Plik GUTZEIT	Data 31/07/2013	Skala
Lakfam					891126	
					891126	Edycja 0 / Arkusz 1/1

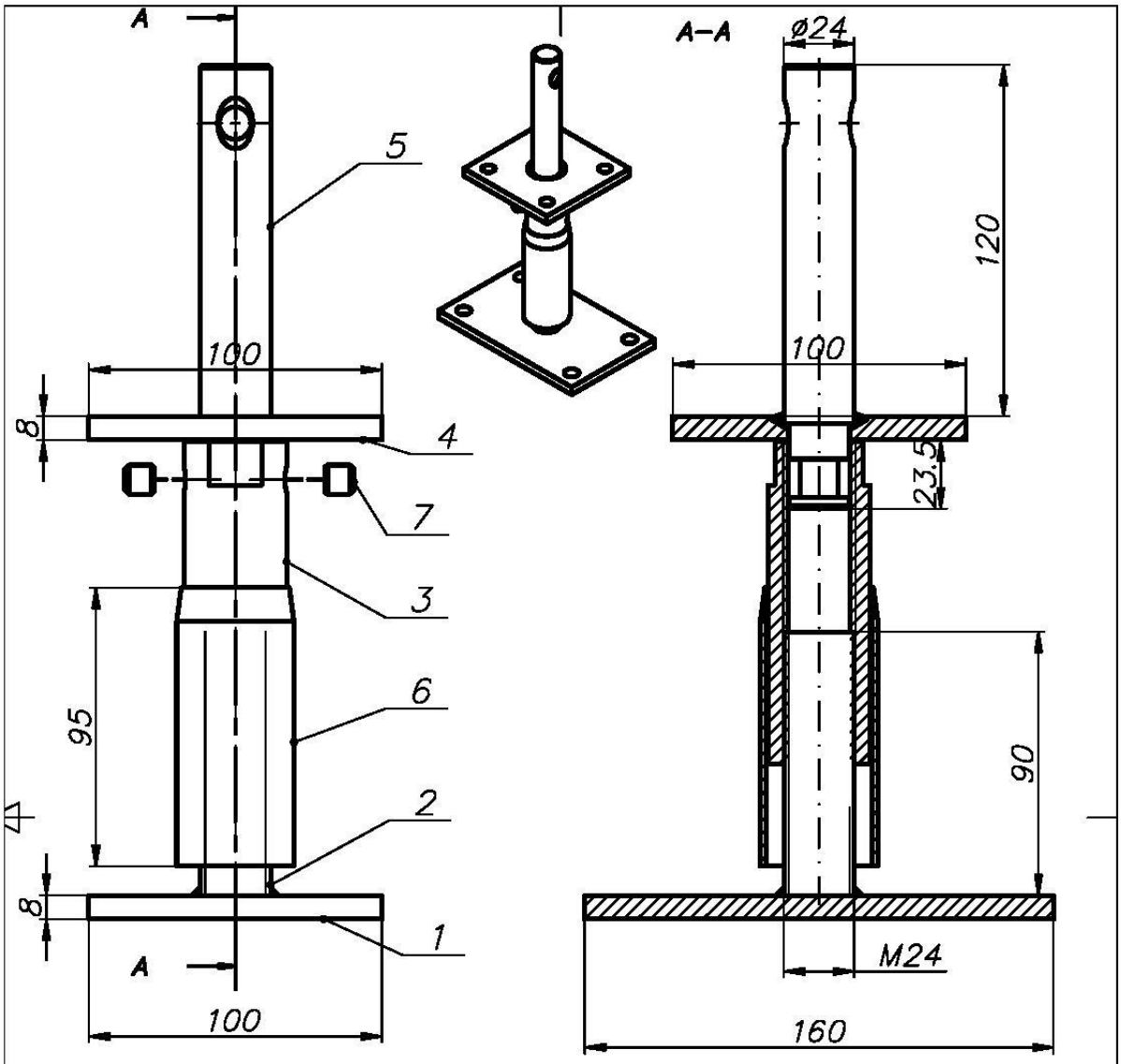

Poz.	Szt.	Nr. rys./Ozn.	Nazwa	Materiał	Uwagi
7	2	DIN 913	Schraube M10x10		
6	1	891198 / 6	Rohr 40x2 L=95	S235JR	
5	1	891198 / 5	Bolzen 24x152	S235JR	
4	1	891198 / 4	Trägenplatte 8x100x100	S235JR	
3	1	891198 / 3	Gewindehülse 35x110	S235JR	
2	1	DIN 976	Gewindebolzen M24x90	S235JR+C	
1	1	891198 / 1	Grundplatte 8x100x160	S235JR	

Lista elementów

Poz.	Ilość: 1	Materiał:		Ciężar:	
Projektował M.Mielcarek	Zmienił	Zatwierdził – data	Plik GUTZEIT	Data 31/07/2013	Skala
Lakfam		891198, h=140			
		891198		Edycja 0	Arkusz 1/1

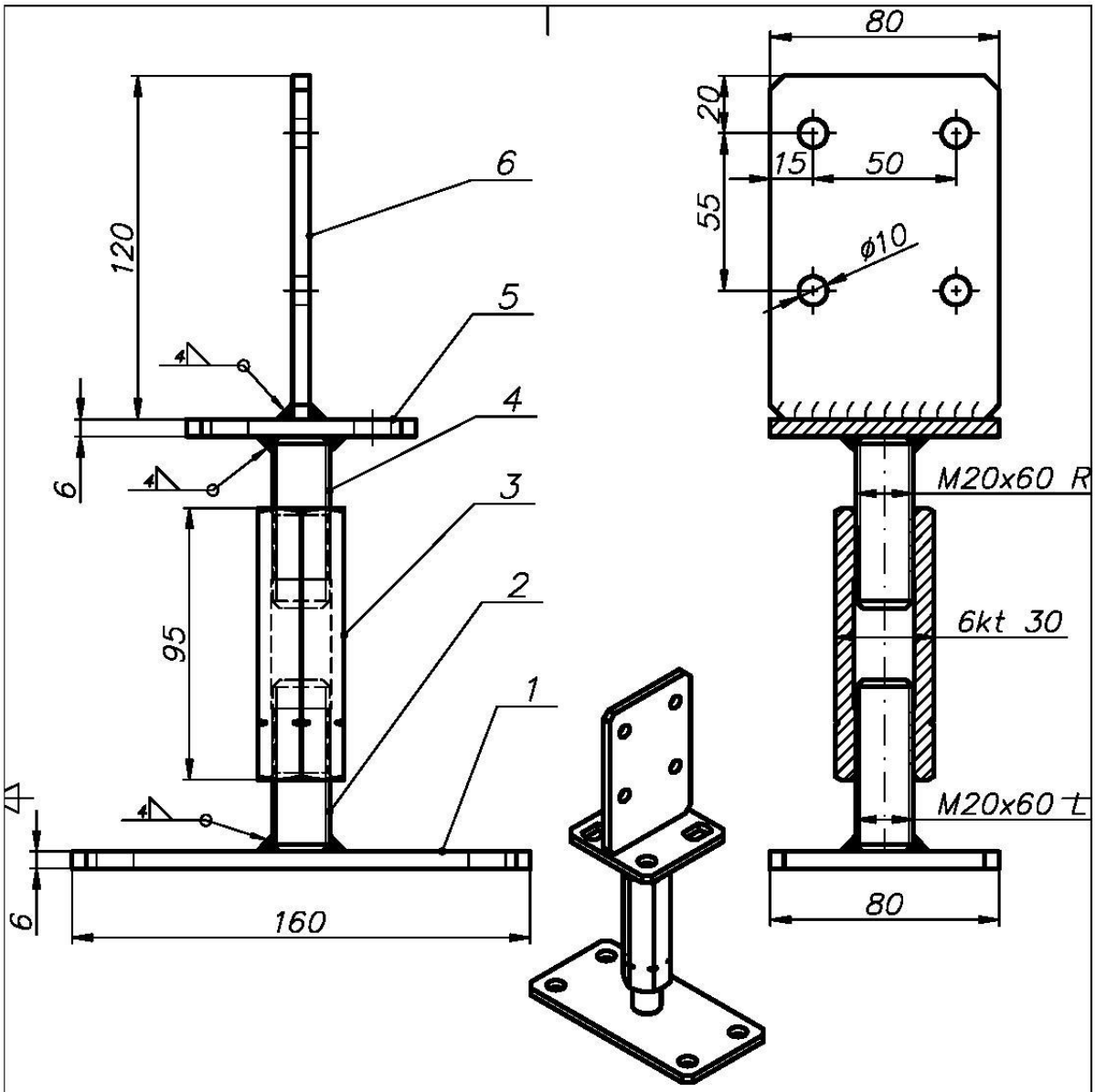

Poz.	Szt.	Nr. rys./Ozn.	Nazwa	Materiał	Uwagi
6	1	891052 / 6	Steg 6x80x120	S235JR	
5	1	891050 / 5	Trägeplatte 6x80x80	S235JR	
4	1	DIN 976	Gewindebolzen M20x60 R	S235JR+P+Mo+AR	
3	1	891050 / 3	Gewindehülse M20x95	S235JR	
2	1	DIN 976	Gewindebolzen M20x60 L	S235JR+P+Mo+AR	
1	1	891050 / 1	Grundplatte 6x80x160	S235JR	

Lista elementów

Poz.	Ilość: 1	Materiał:		Ciężar:	
Projektował M.Mielcarek	Zmienił	Zatwierdził – data	Plik GUTZEIT	Data 31/07/2013	Skala
Lakfam		891052 – PF–TS			
		891052		Edycja 0	Arkusz 1/1

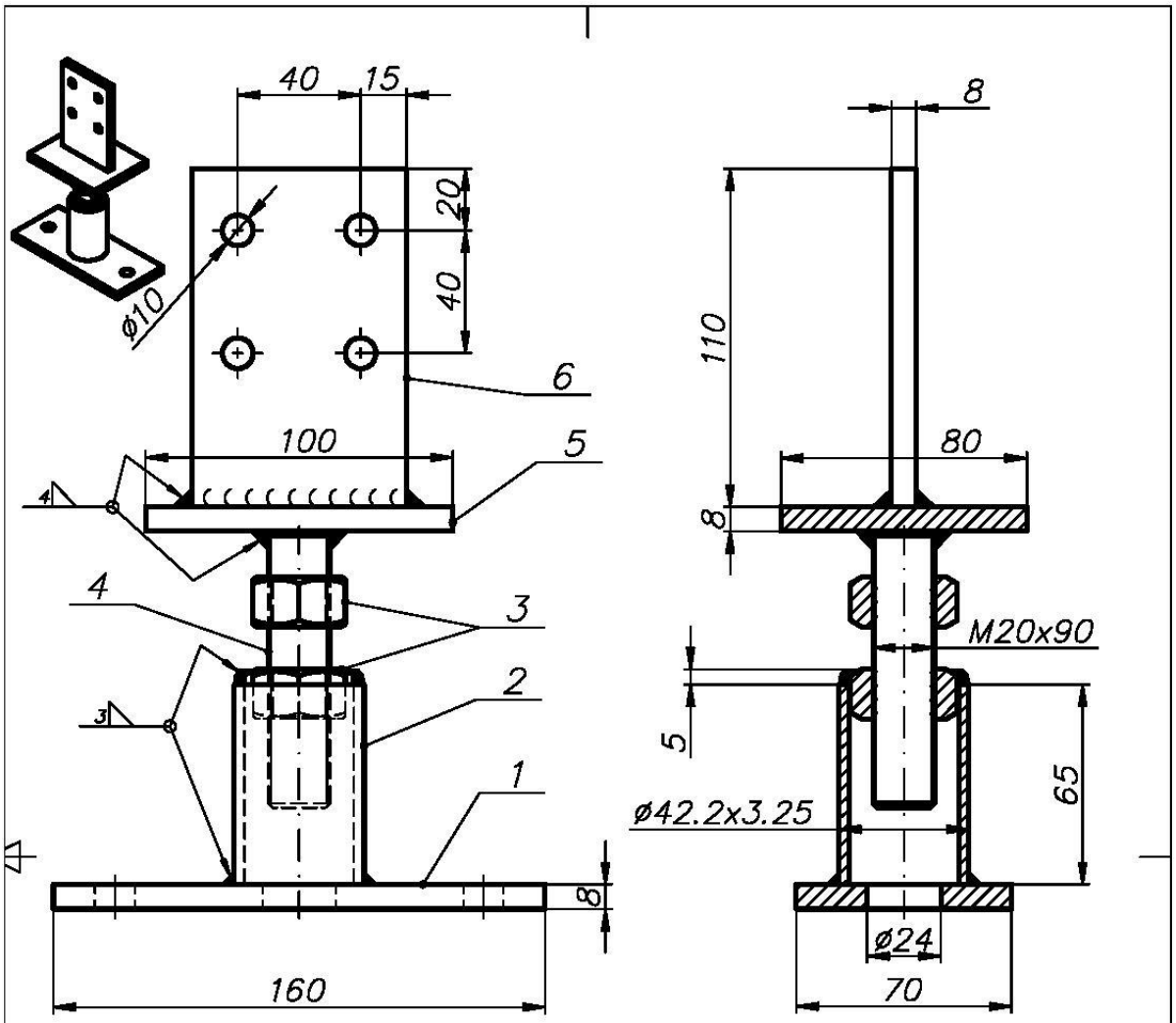

Poz.	Szt.	Nr. rys./Ozn.	Nazwa	Materiał	Uwagi
6	1	89920 / 6	Steg 8x70x110	S235JR	
5	1	89920 / 5	Trägeplatte 8x80x100	S235JR	
4	1	DIN976	Gewindebolzen M20x90	S235JR+P+Mo+AR	
3	2	DIN 934	Mutter M20		
2	1	89920 / 2	Rohr 42,3x3,25 L=65	S235JR	
1	1	89920 / 1	Grungplatte 8x70x160	S235JR	

Lista elementów

Poz.	Ilość: 1	Materiał:		Ciężar:	
Projektował M.Mielcarek	Zmienił	Zatwierdził – data	Plik GUTZEIT	Data 31/07/2013	Skala
Lakfam			89920		
			89920	Edycja 0	Arkusz 1/1

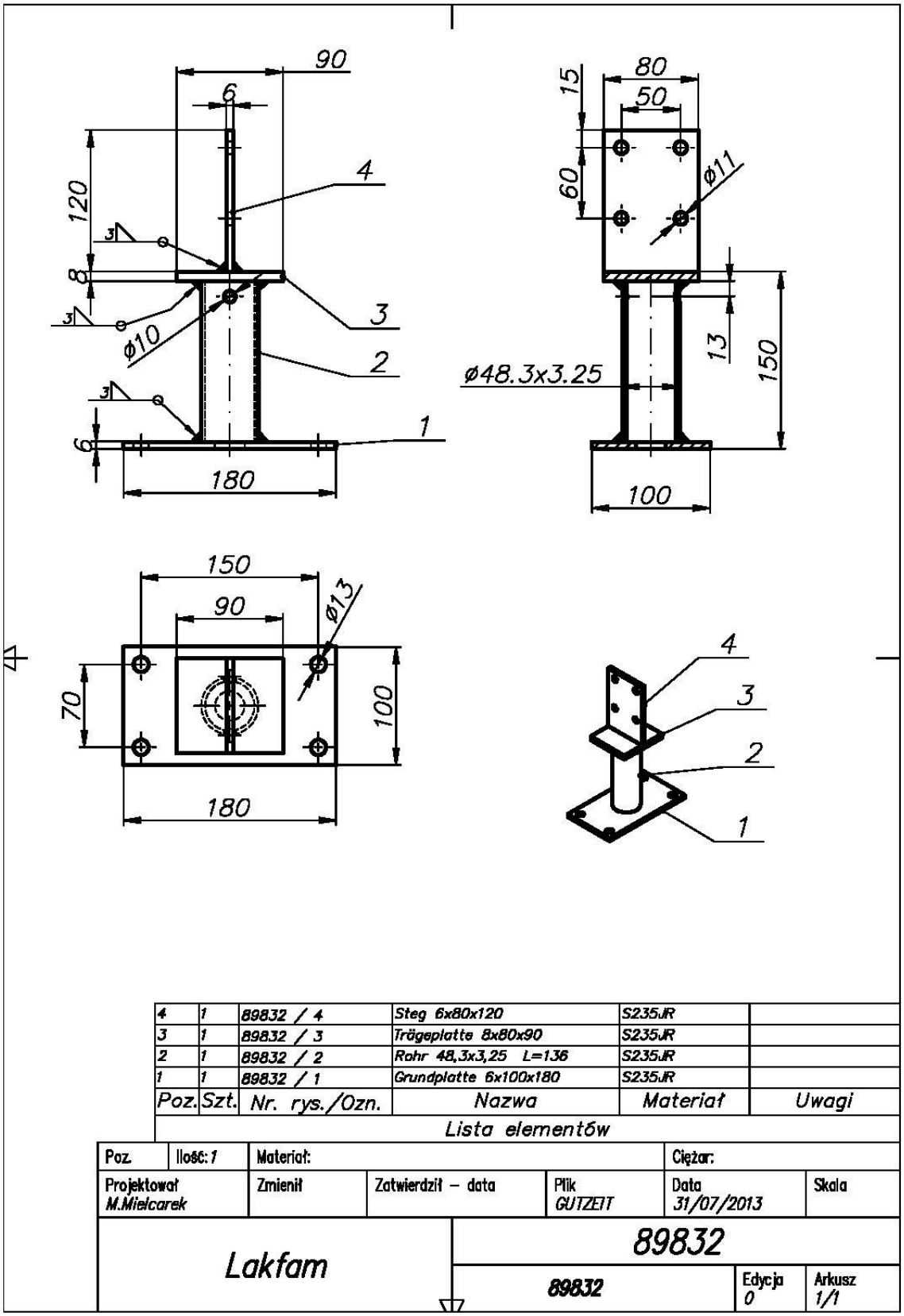

Poz.	Szt.	Nr. rys./Ozn.	Nazwa	Materiał	Uwagi
4	1	89832 / 4	Steg 6x80x120	S235JR	
3	1	89832 / 3	Trägeplatte 8x80x90	S235JR	
2	1	89832 / 2	Rohr 48,3x3,25 L=136	S235JR	
1	1	89832 / 1	Grundplatte 6x100x180	S235JR	

Lista elementów

Poz.	Ilość: 1	Materiał:			Ciężar:	
Projektował M.Mielcarek		Zmienił	Zatwierdził – data	Plik GUTZEIT	Data 31/07/2013	Skala
Lakfam					89832	
					89832	Edycja 0 / Arkusz 1/1

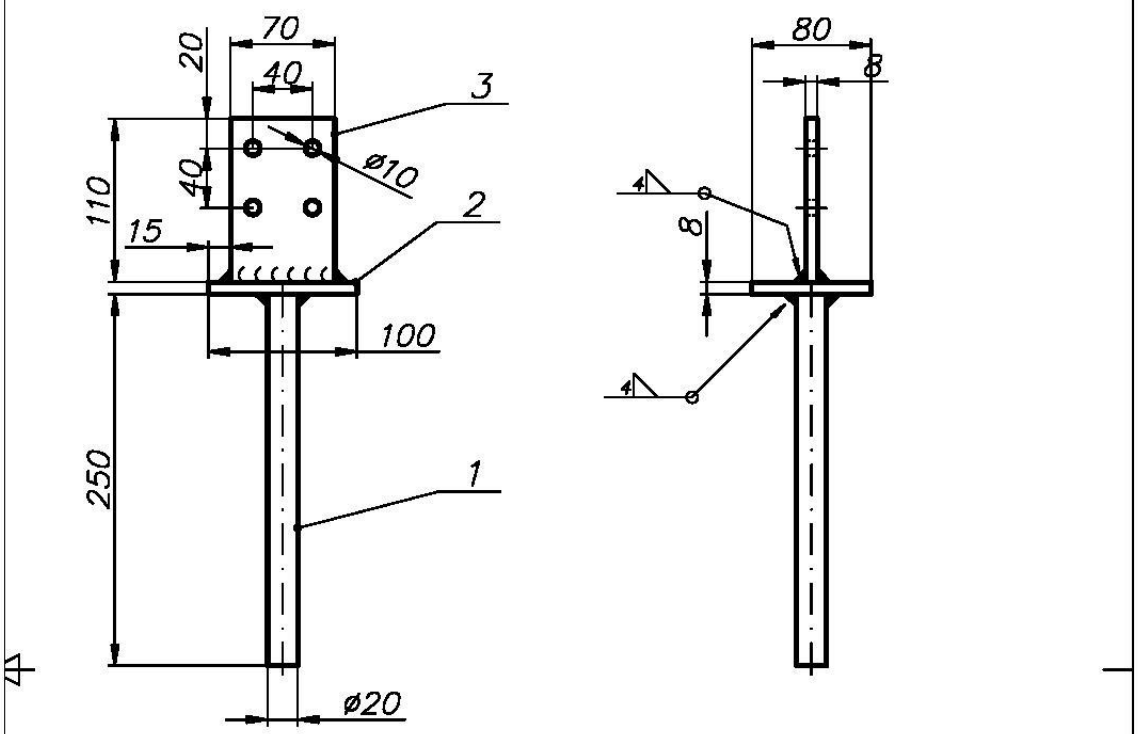

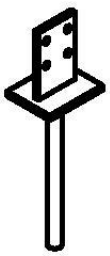

Poz.	Szt.	Nr. rys./Ozn.	Nazwa	Materiał	Uwagi
3	1	89810 / 3	Steg 8x70x110	S235JR	
2	1	89810 / 2	Trägeplatte 8x80x100	S235JR	
1	1	89810 / 1	Betonstahl 20x250	B500SP	

Lista elementów

Poz.	Ilość: 1	Materiał:			Ciężar:	
Projektował M.Mielcarek		Zmienił	Zatwierdził – data	Plik GUTZEIT	Data 31/07/2013	Skala
Lakfam					89810	
					89810	Edycja 0 / Arkusz 1/1

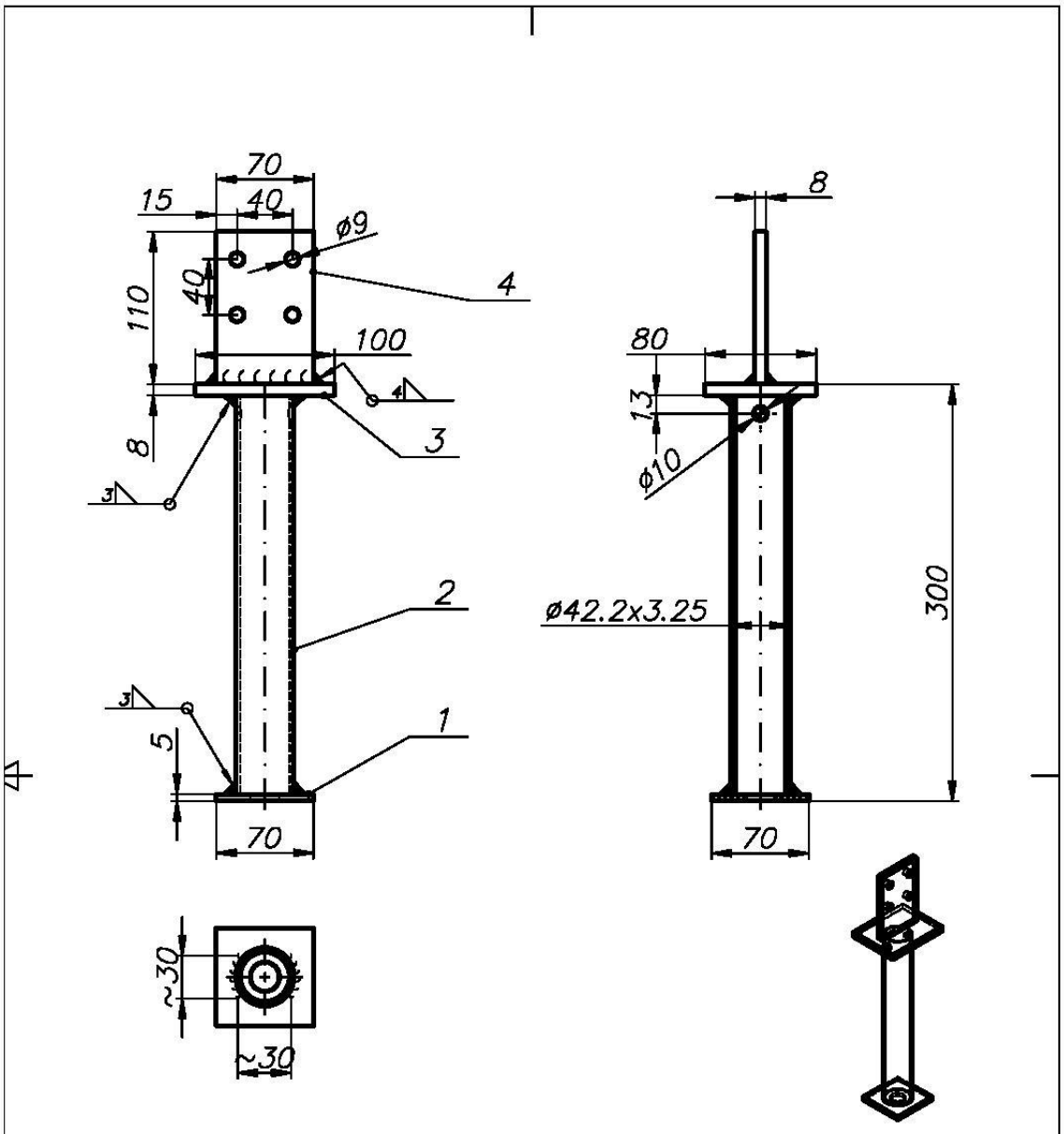

Poz.	Szt.	Nr. rys./Ozn.	Nazwa	Materiał	Uwagi
4	1	89810 / 3	Steg 8x70x110	S235JR	
3	1	89810 / 2	Trägeplatte 8x80x110	S235JR	
2	1	89840 / 2	Rohr 42,2x3,25 L=287	S235JR	
1	1	89840 / 1	Grundplatte 5x70x70	S235JR	

Lista elementów

Poz.	Ilość: 1	Materiał:			Ciężar:	
Projektował M.Mielcarek		Zmienił	Zatwierdził – data	Plik GUTZEIT	Data 31/07/2013	Skala
Lakfam					89840	
					89840	Edycja 0 / Arkusz 1/1

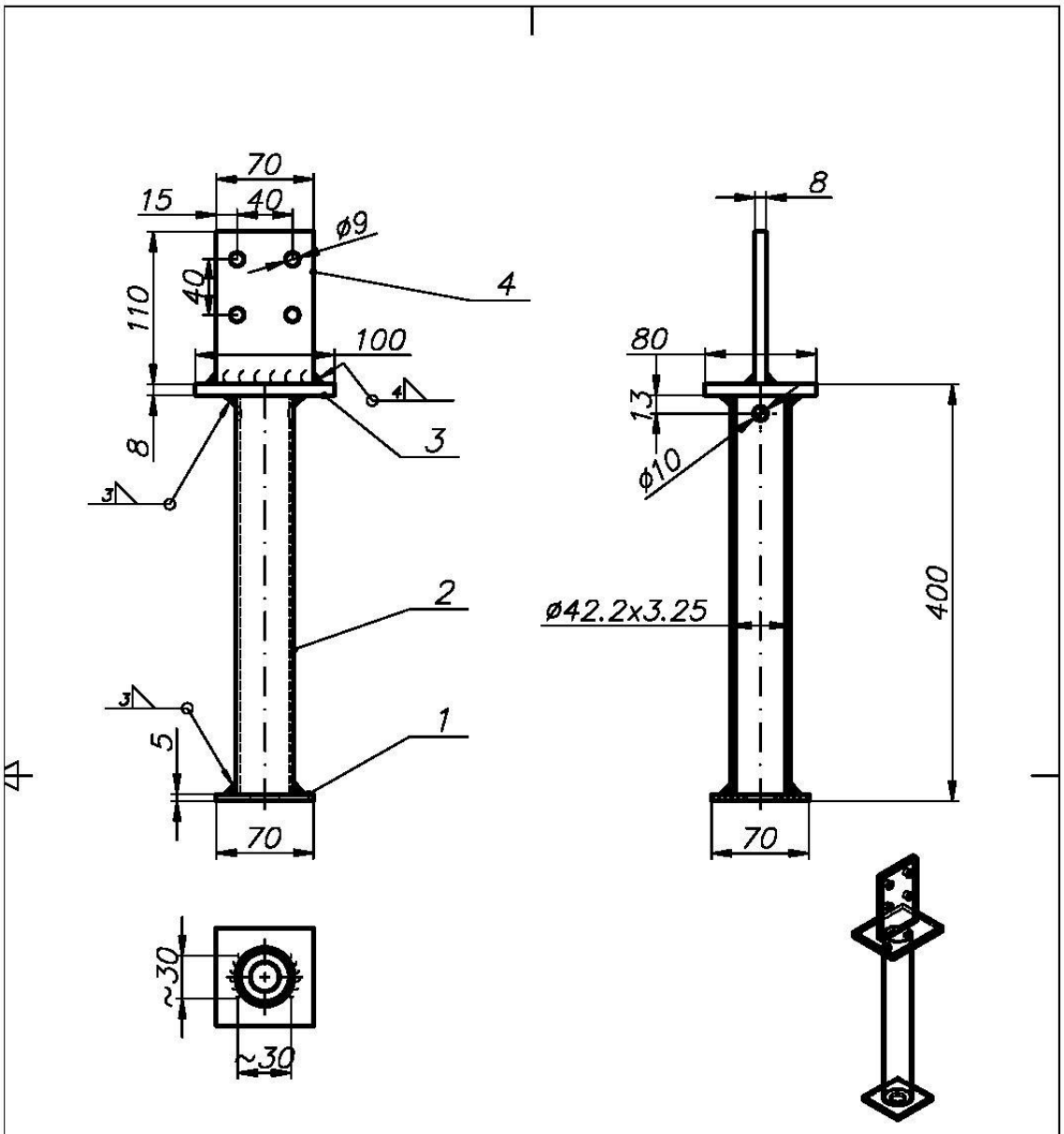

Poz.	Szt.	Nr. rys./Ozn.	Nazwa	Materiał	Uwagi
4	1	89810 / 3	Steg 8x70x110	S235JR	
3	1	89810 / 2	Trägeplatte 8x80x110	S235JR	
2	1	89841 / 2	Rohr 42,2x3,25 L=387	S235JR	
1	1	89840 / 1	Grundplatte 5x70x70	S235JR	

Lista elementów

Poz.	Ilość: 1	Materiał:			Ciężar:	
Projektował M.Mielcarek		Zmienił	Zatwierdził – data	Plik GUTZEIT	Data 31/07/2013	Skala
Lakfam					89841	
					89841	Edycja 0 / Arkusz 1/1

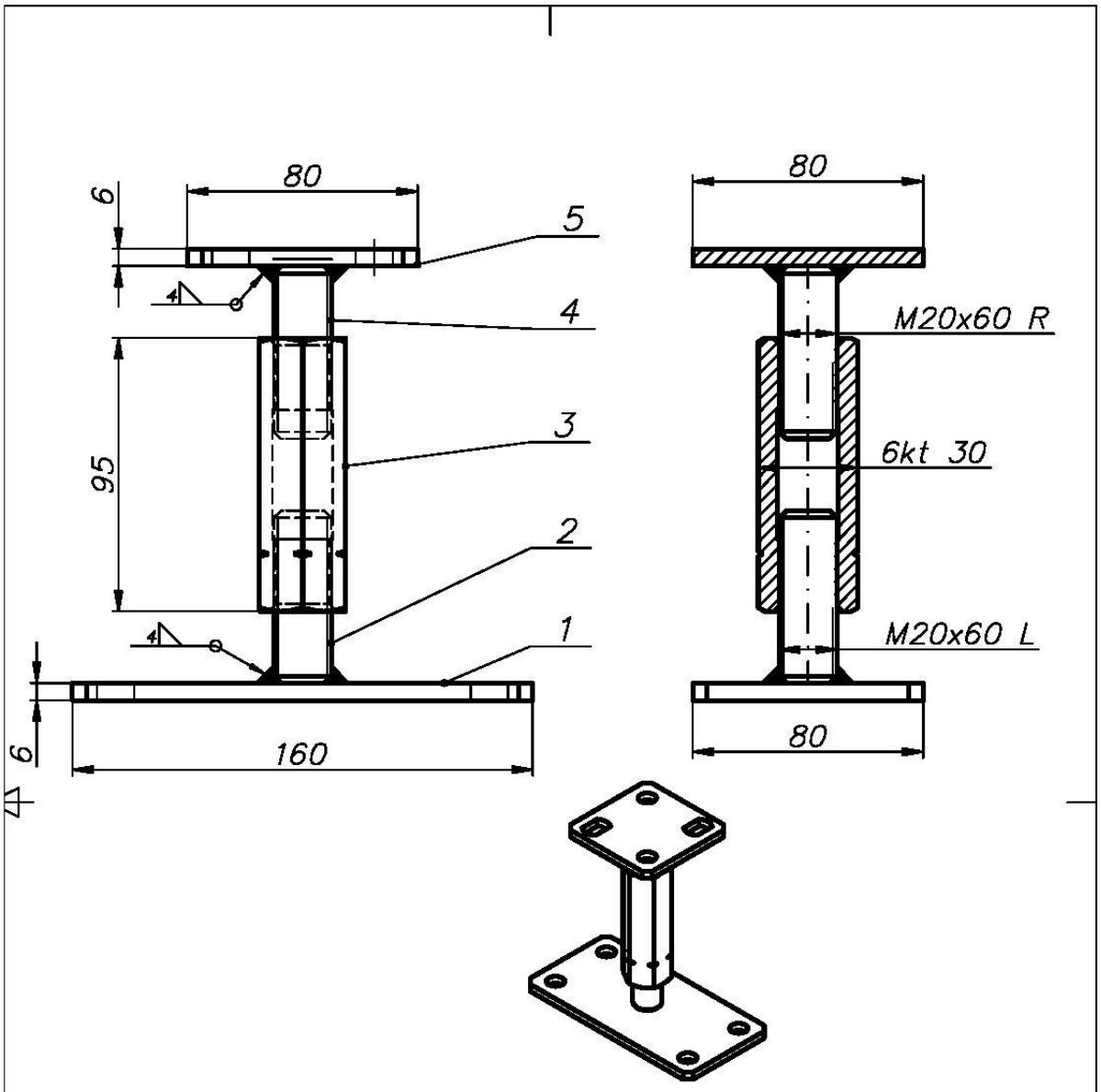

Poz.	Szt.	Nr. rys./Ozn.	Nazwa	Materiał	Uwagi
5	1	891050 / 5	Trägeplatte 6x80x80	S235JR	
4	1	DIN 976	Gewindebolzen M20x60–R	S235JR+P+Mo+AR	
3	1	891050 / 3	Gewindehülse M20x95	S235JR	
2	1	DIN 976	Gewindebolzen M20x60–L	S235JR+P+Mo+AR	
1	1	891050 / 1	Grundplatte 6x80x160	S235JR	

Lista elementów

Poz.	Ilość: 1	Materiał:		Ciężar:	
Projektował M.Mielcarek	Zmienił	Zatwierdził – data	Plik GUTZEIT	Data 21–07–2009	Skala
Lakfam			891050 – PF–TP		
			891050	Edycja 0	Arkusz 1/1

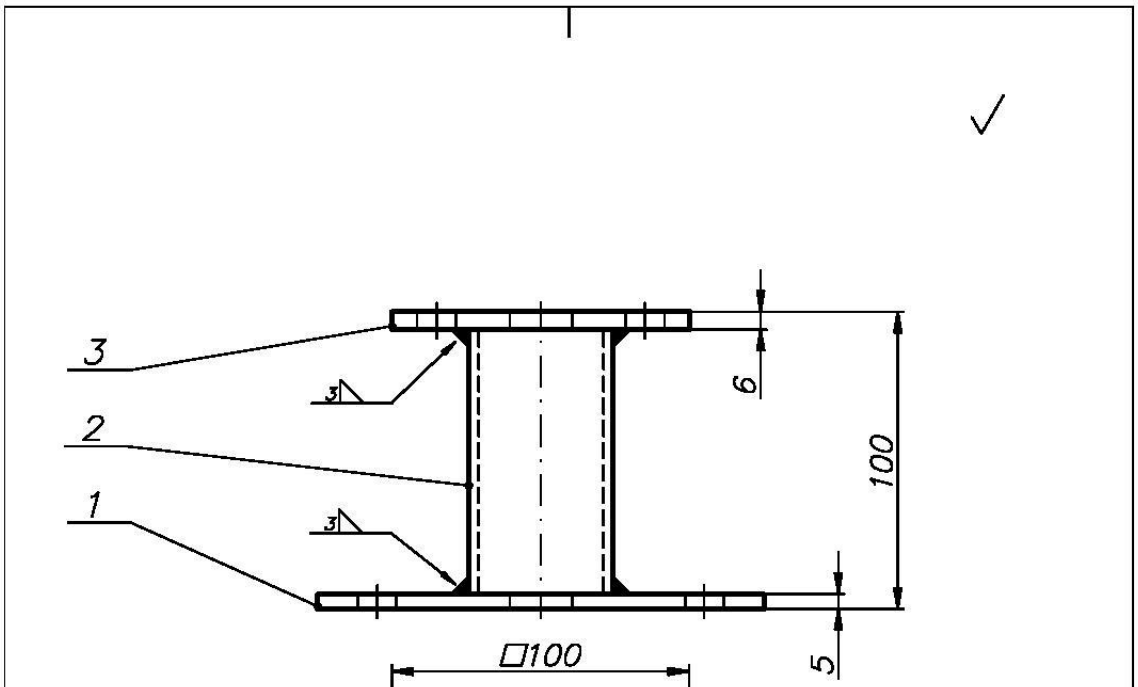

Poz.	Szt.	Nr. rys./Ozn.	Nazwa	Materiał	Uwagi
3	1	89850 / 3	Trägeplatte 6x100x100	S235JR	
2	1	89850 / 2	Rohr 48,3x3,25 L=89	S235JR	
1	1	89850 / 1	Grundplatte 5x150x150	S235JR	

Lista elementów

Poz.	Ilość: 1	Materiał:			Ciężar:	
Projektował M.Mielcarek		Zmienił	Zatwierdził – data	Plik GUTZEIT	Data 31/07/2013	Skala 1:1
Lakfam				89850		
				89850	Edycja 0	Arkusz 1/1

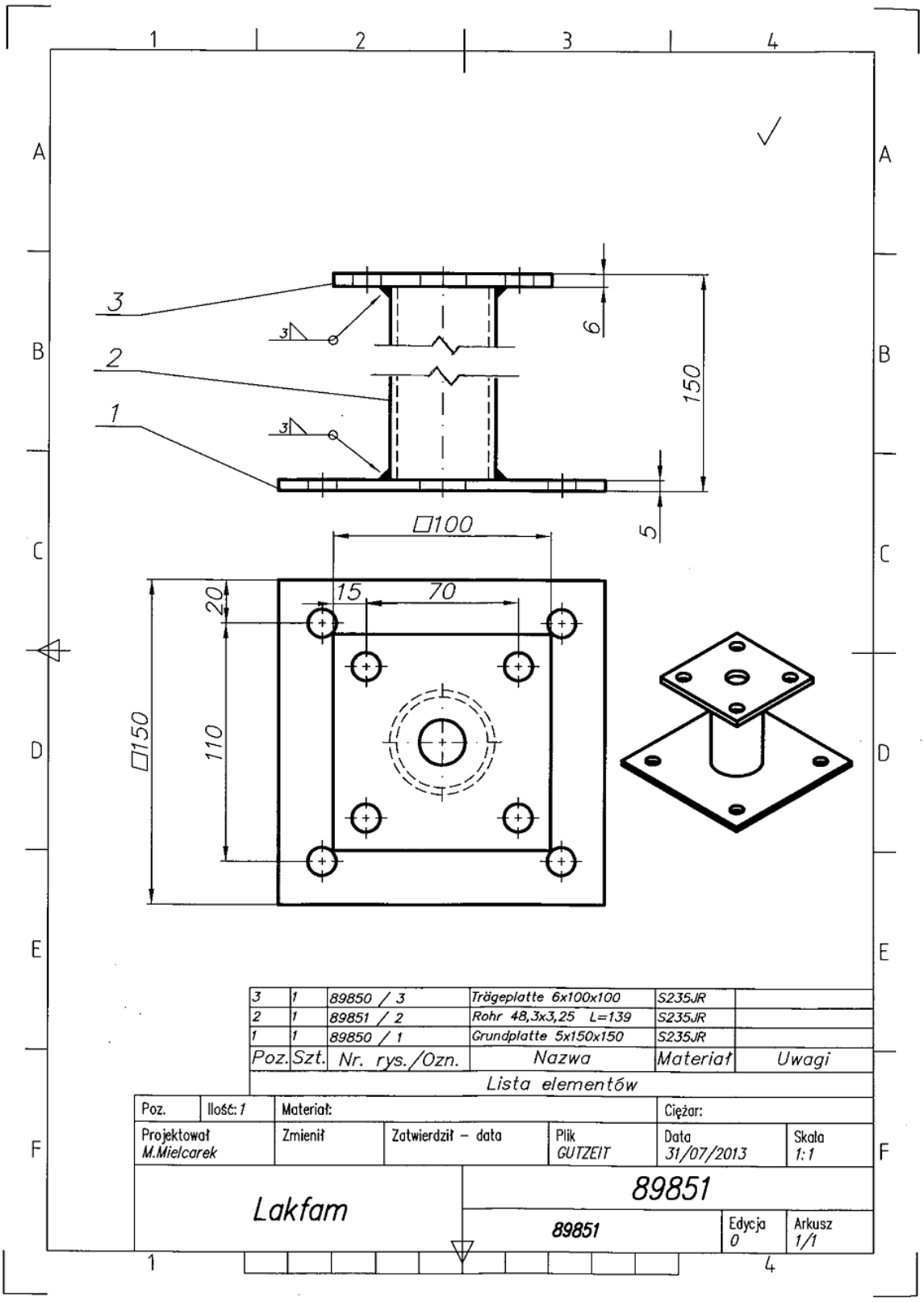

Poz.	Szt.	Nr. rys./Ozn.	Nazwa	Materiał	Uwagi
3	1	89850 / 3	Trägeplatte 6x100x100	S235JR	
2	1	89851 / 2	Rohr 48,3x3,25 L=139	S235JR	
1	1	89850 / 1	Grundplatte 5x150x150	S235JR	

Lista elementów

Poz.	Ilość: 1	Materiał:		Ciężar:	
Projektował M.Mielcarek	Zmienił	Zatwierdził – data	Plik GUTZEIT	Data 31/07/2013	Skala 1:1
Lakfam			89851		
			89851	Edycja 0	Arkusz 1/1

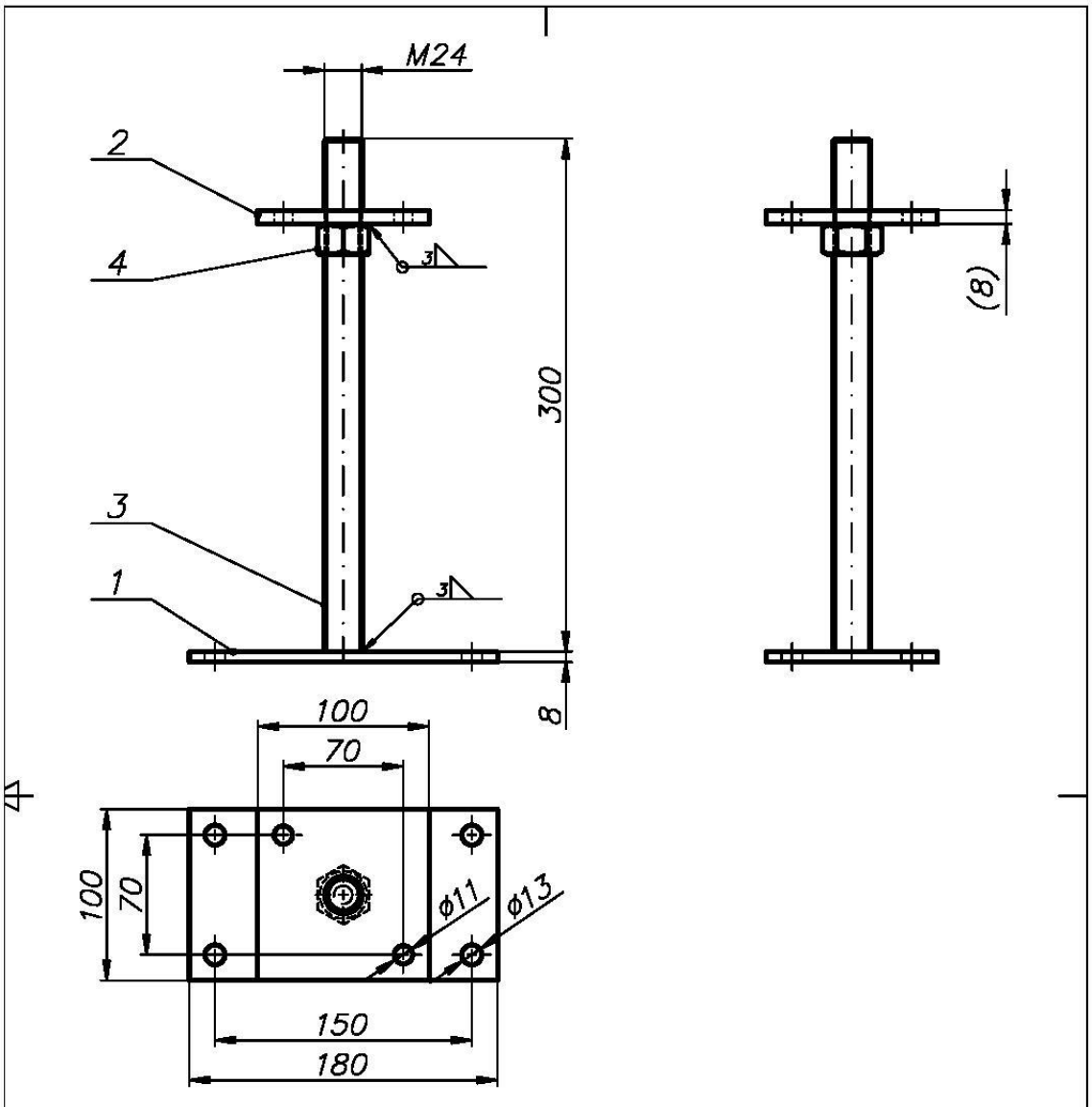

Poz.	Szt.	Nr. rys./Ozn.	Nazwa	Materiał	Uwagi
4	1	DIN 934	Mutter M24		
3	1	DIN 976	Gewindestange M24x300	S235JR+C	
2	1	89852 / 2	Trägeplatte 8x100x100	S235JR	
1	1	89852 / 1	Grundplate 8x100x180	S235JR	

Lista elementów

Poz.	Ilość: 1	Materiał:			Ciężar:	
Projektował M. Mielcarek		Zmienił	Zatwierdził – data	Plik GUTZEIT	Data 31/07/2013	Skala 1:1

Lakfam	89852		
	89852	Edycja 0	Arkusz 1/1